21 GB

WURLITZER

CE

ONE MORE TIME VINYL

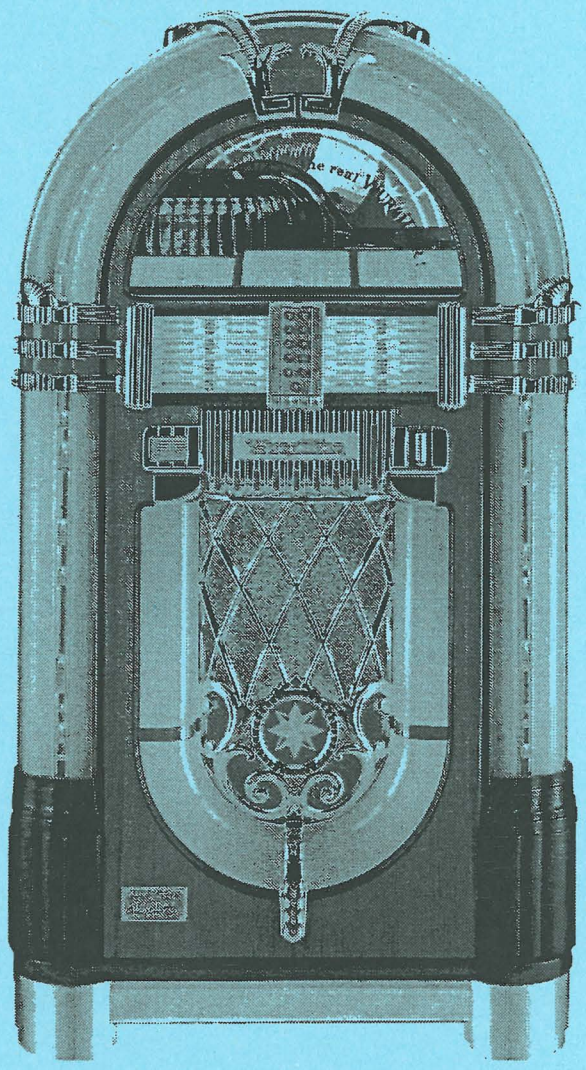

AMR Publishing
A Divison of Victory Glass Inc.
3260 Ute Avenue Waukee, Iowa 50263
Phone (515) 987-5765 FAX (515) 987-5762
www.victoryglass.com

Operating Instructions

INTRODUCTION

Welcome to the sound of WURLITZER music. The ONE MORE TIME VINYL is the replica of the WURLITZER 1015 which is the most famous jukebox ever built. More than 56,000 units have been produced 1947 - 48.

Enjoy the great sound of WURLITZER.

1 Technical details OMT VINYL 3
1.1 Features 3
1.2 Power supply 3
1.3 Dimensions: 3
1.4 Optional 3
2 Set up to play 4
3 Component functions and adjustment 4
3.1 Selection & Credit Computer (S&CC) 4
3.2 Service programs 5
3.2.1 How to call up service program 5
3.2.2 How to leave the service program 6
3.2.3 Memory ON/OFF 6
3.3 Free play 6
3.4 Playstimulator / continuous play 7
3.5 Coin and credit programming 8
4 Device description of the amplifier K99 9
5 Technical data K99 9
6 Verification of power voltage 10
7 Position of fuses and plug connectors on the K99 11
8 The first power ON 12
9 Volume control 12
10 The infrared remote control 13
11 Treble and bass control 14
12 Automatic volume correction 14
13 Background Music - volume attenuation 14
14 External speaker connection 15
15 External amplifier connection 16
16 Disabling the internal mute circuit 17
17 Input selector 17
18 Trouble shooting chart 18
18.1 Failures of the illumination, lamps and power system generally 18
18.2 Fuses of the power supply - which one controls what circuit 19
18.3 Faults with the coin and credit system 20
18.4 Faults with the selection system (Credit system is working) 21
18.5 Repetitive play of records, selected or non-selected ones 22
18.6 Failures of the record changer after properly completed selection 23
18.7 Failures with the tone arm or the tone system 24

18.8 Record not properly returned to carrier 25
18.9 Notes 25
18.9.1 Note 1 25
18.9.2 Note 2 25
18.9.3 Note 3 A 26
18.9.4 Note 3 B 26
18.9.5 Note 3 C 26
18.9.6 Note 4 27
18.9.7 Note 5 27
18.9.8 Note 6 27
18.9.9 Note 7 27
18.9.10 Note 8 27
18.9.11 Note 9 27
18.9.12 Note 10 28

19 Connection diagram 29

20 Circuit diagram OMT VINYL chassis 30

21 Wiring diagram K99 - power supply 31

22 Wiring diagram K99 - power amp 32

23 Wiring diagram K99 - pre amp 33

24 Wiring diagram K99 - sound controler 34

25 Wiring diagram K99 - port A 35

26 Wiring diagram K99 - mute 36

27 Wiring diagram K99 - power supply Euro 230V 37

28 Connection diagram IR remote control/amplifier K99 39

29 Index 40

1 Technical details OMT VINYL

1.1 Features

- Stereo amplifier with automatic level control and electronic overload protection, power 2 x 55w RMS
- 3 way stereo loudspeaker system with 6 speakers
- 100 selections (50 records) played by a high quality Shure Magnetic System
- Microprocessor controlling all functions including credit and bonus steps as well as record plays and automatic memory of the top tunes
- Playstimulator playing a record in intervals between 1 and 98 minutes automatically
- An LED display presents playing record or credit available
- Integrated volume control which can also be used as wired remote control
- Connections for additional amplifier, external loudspeakers, microphone kit and output transformer

1.2 Power supply

100 - 240v, 50/60cps

1.3 Dimensions:

Height	1520mm / 60.0inch
Width	815mm / 32.0inch
Depth	640mm / 25.25inch
Weight	157kg / 346lbs

1.4 Optional

- Infrared remote control with selection buttons
- Output transformer
- Microphone kit
- External speakers: Model LS 120
  2 way speaker system, floor standing or wall mounting, cabinet with wooden pattern or black high polish surface.
  Dimensions:
  Height 520mm / 20.5inch
  Width 320mm / 12.6inch
  Depth 250mm / 9.8inch
  Musical power 120w, 8ohms

2 Set up to play

The Wurlitzer ONE MORE TIME VINYL is delivered ready to play. There are several tasks to perform in order to ensure proper operation and best sound.

1. Open the jukebox. Apply slightly pressure against the door while turning the key. The lock is spring loaded so the slight pressure against the door allows the key to turn easily.

2. Remove the shipping bolts (M8x70) from the mechanism platform. There are two, one in the rear right corner near the base of the tone arm, the other one in the front left corner near the record carrier.
   These bolts secure the platform during transport. Remove these bolts completely.

3. Release the tie-down tone arm strap located at the base of the tone arm. This strap secures the tone arm during transport. Check the cartridge and needle to insure proper position in the tone arm.

4. Place the records in the record carrier and title strips into the corresponding numerical slots in the title strip holder. The holder can be removed completely from the machine to allow better access by pushing the two locking springs left and right side slightly inwards.
   To turn the record carrier, operate the lever marked 'rotate carrier'. The record carrier can be turned in steps to achieve the best position for loading.
   To step up credit, please use the credit button on the coin acceptor interface (Europe version) or the credit button on the coin channel (US version).

☑ You should now be ready to enter a selection.

NOTE: Save the shipping guards and the tone arm strap. You will need them in case you decide to move the jukebox to another location. Records should be taken out for transportation.

ATTENTION! Some parts of the electrical circuitary are connected to the power line (power transformer, fluorescent tube, ballast and accociated wiring).

Never attempt any intervention to these parts unless qualified.

3 Component functions and adjustment

3.1 Selection & Credit Computer (S&CC)

The Selection and Credit Computer is the brain of the Wurlitzer One More Time Vinyl. There are several optional programs and programming features which can be very useful.

- Service Program
  This program allows to retrieve various information as well as concluding certain service checks on the mechanism. All programs are communicated to the S&CC by means of the selection buttons.
- Free play
  This allows free selection of multiple titles.
- Playstimulator
  The playstimulator plays a record automatically in intervals of 1 to 98 minutes.

3.2 Service programs

3.2.1 How to call up service program

1. Set slide switch 'SERVICE' (1) to 'ON'.
2. Press 'LT' button (2) once.

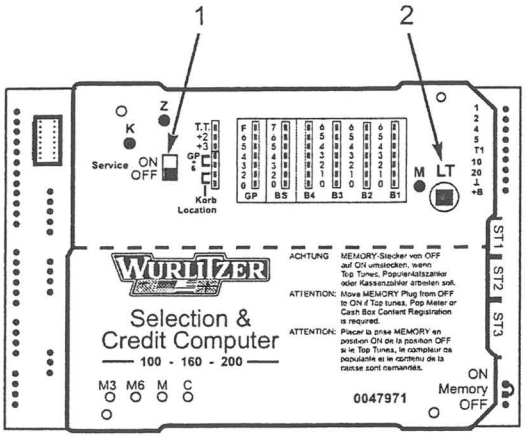

Button 0 - least popular titles (flops)
Pressing button 0 once indicates the least popular record. Pressing button 0 again shows the record with second lowest number of plays. Press button 0 again shows the third lowest etc..
Press button 'R' (RESET) to terminate the 'flop' call.

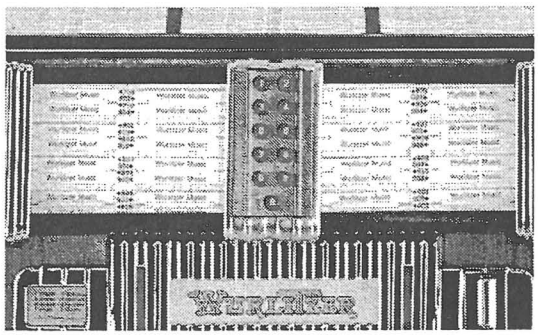

Button 1 - Top Tunes
Shows the record which was played most frequently followed by the number of plays (Max. 99). If one record was played more often than 99 times, the counter remains in this position. Pressing button 1 again shows the second popular record, etc.
Press button 'R' RESET to terminate the 'Top Tune' call.

Button 2 - cash box contents
Shows the cash box contents in basic units; basic units being the value of the lowest coin, resp. coin value of coin output 1 on the S&CC.

Example (lowest coin 25ct): display readout: 0 4 5 = 45 x 25ct = $ 11.25

Press button 'R' RESET to terminate the 'cash box contents' call.

Button 3 - clear memory
Press and hold down button 3, then press button 'R' RESET. All counters are reset to zero.

Button 4 - display check and program number version
When you press button 4 the digital display automatically indicates the number 8 on all three digits. Successivly 'Record Playing', 'Hit of the House', 'Error' and 'Credit' will light and the program version number will appear, e.g. 7.01 or higher.

Button 5 - Playstimulator
The playstimulator is playing a random record automatically after a programmed time period. It is programmable between 1 and 98 minutes. For programming please refer to chapter 3.4, on page 7.

Button 6 - A-side solenoid
When you press button 6 the display shows 6 - 1, relay M6 of the S&CC and the A-side solenoid should be activated while the display shows 6 - 2.

Button 7 - check of gear box motor
When you press button 7 relay M should be activated and the changer plays the B-side of the record. Display shows 7 - 4.
After the record has been played, it will be returned into the carrier.

Button 8 - check of record carrier
When you press button 8 relay M3 is activated and the record carrier turns as long as button 8 is pressed. The gripper arm must be in rest position. The display shows 8 - 0.

Button 9 - gripper arm position
Press button 9, test of the gripper arm position. Display shows 9 - 0 if the gripper arm is in rest position, 9 - 1 if the gripper arm is in play position.

3.2.2 How to leave the service program

1. Set slide switch 'SERVICE' to 'OFF'.

1. Press 'LT' button. The record carrier turns to position 101.

3.2.3 Memory ON/OFF

ATTENTION! Statistic read outs (service programs 0 - 2) are only valid if the internal memory battery is connected to Memory ON (plug on upper pin) as shown.
With Memory OFF (plug on lower pin) counters are reset when the jukebox is switched off.

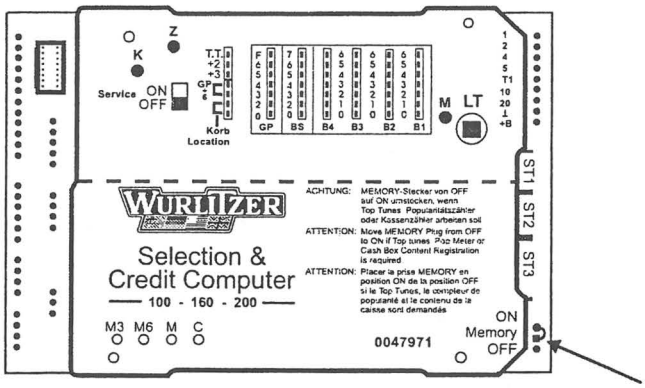

3.3 Free play

Connect jumper wire on 'GP' between 0 and F on the S&CC. Press 'LT' button.

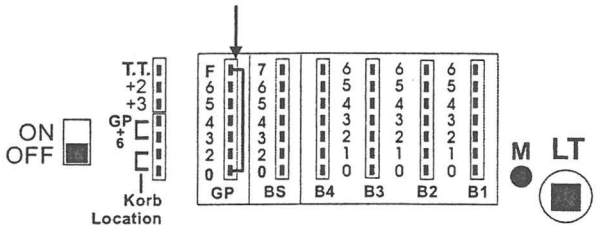

Free play now allows free selections up to 252 titles.

3.4 Playstimulator / continuous play

The playstimulator may be programmed to random selection of a title in periods of 1 to 98 minutes. (Factory preset is 99 for continuous play). Therefore:

1. Call up service program (slide switch SERVICE in position ON, press 'LT' button once).

2. Press button 5.

3. Press button 9, display shows 9 _ _.

4. Enter number of minutes required for the interval between play
   - ⇨ 01 = 1 minute
   - ⇨ 02 = 2 minutes etc.
   - ⇨ 00 = playstimulator is switched OFF
   - ⇨ 99 = continuous play

5. Press button 'R' RESET.

6. Set slide switch SERVICE to position OFF.

7. Press 'LT' button.

NOTE: If the jukebox is equipped with a continuous play switch, you only have to set the slide switch to position ON to activate the playstimulator/ continuous play.

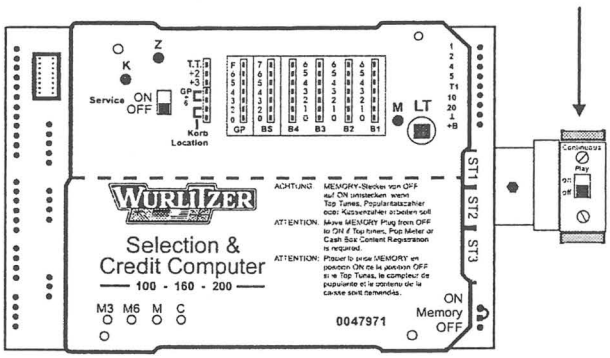

3.5 Coin and credit programming

The price per play is set by jumper wire on the S&CC as shown in the examples. After having changed wire links press 'LT' button to confirm new settings.

US (example)

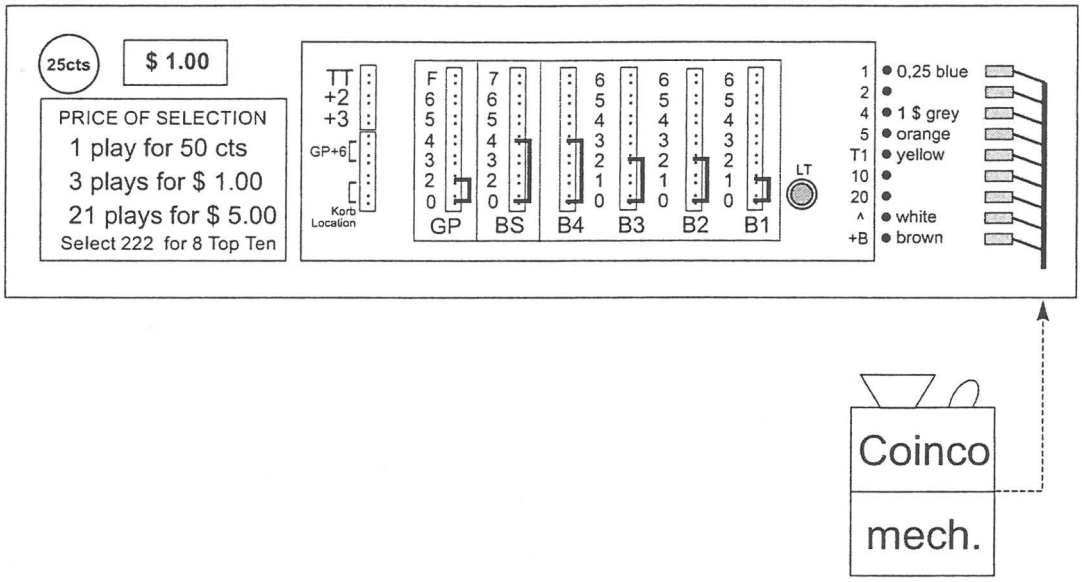

Europe (example)

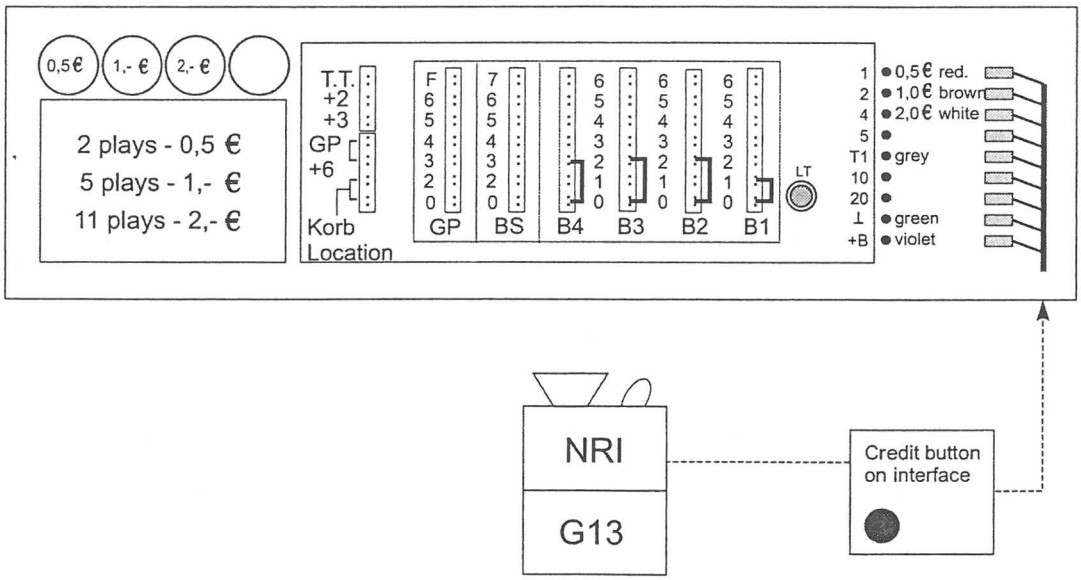

4 Device description of the amplifier K99

The amplifier K99 is optimised for universal use in Wurlitzer jukeboxes. Great importance had been attached for an easy handling and stand alone function without the S&CC unit. The output power is designed for the standard used internal speakers of Wurlitzer jukeboxes.

DETAILS:
Standard equipment:

- Hybrid power stage technology, short circuit and over temperature protected
- 2 inputs (stereo): CD and tape
- 1 mono input for optional microphone kit
- Volume control with 2 pots onboard
- Volume control possible with pots and / or IR at the same time. The pot used at last determines the volume.
- The wired remote box is accessible from the machine rear wall with 2 volume control pots, cancel and mute button (mute with toggle function).
- Bass and treble control with pots
- BGM volume reduction, controllable with pot
- Automatic volume correction (AVC), switchable
- 2 channel operation switchable, RH = internal speakers, LH = external speakers
- Status display with 7segment display
- Independent controllable RCA output to connect external amplifiers
- For use with the old and the new changer mechanism.

Optional:

- Remote control with large distance range. Functions: track selection / volume chan. 1 / volume chan. 2 / mute (toggle) / cancel
- 70v output transformer
- Microphone kit

5 Technical data K99

	General	USA / Canada
Supply	100v - 240v	117v
Mains frequency	50cps - 60cps	60cps
Input voltage CD	typ. 1.2v	typ. 1.2v
Input voltage tape	300mv	300mv
Output voltage pre amplifier	<=1veff	<=1veff
Output power	2 x 55w (rms)	2 x 55w (rms)
Output impedance	min. 4ohm	min. 4ohm
Transmission range	20cps - 20,000cps	20cps - 20,000cps
Distorsion factor	< 1%	< 1%
Noise level	Depending on the adjusted volume of the jukebox noise levels of more than 70 dB(A) can be reached.	

6 Verification of power voltage

The voltage settings are marked on the cover plate of the mains transformer. Machines for USA are set to 117v. They have a special transformer according to UL standard which is not adjustable. Jukeboxes "UNI-Pack" are shipped with 230v setting. Mains voltage is indicated on the label of the transformer cover. The mains fuse (T3.15A/230v F6A/117v) is located on the left bottom side in-between the three terminals for the bill acceptor, the external mains switch and the fluorescent lamps.

Loosen the four screws to remove the cover plate (small arrows) to get access to the mains transformer.

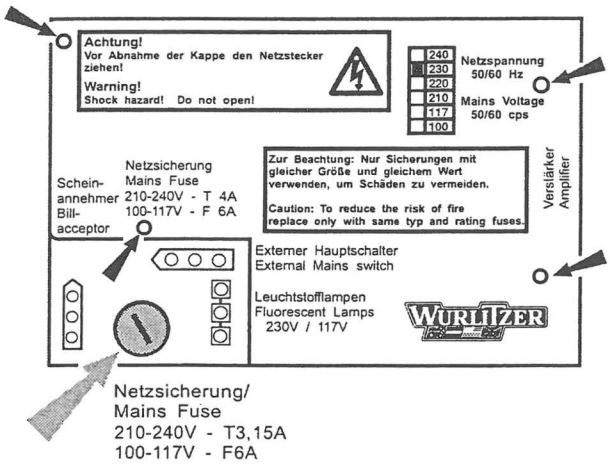

ATTENTION! Always remove power plug before opening transformer cover plate. Never attempt any intervention to these parts unless qualified!

The position of the two plug connectors on the transformer terminals 1 to 9 (primary side) indicates the current voltage setting. The following combinations are possible:

240v = 1 - 9

230v = 1 - 8

220v = 2 - 9

210v = 2 - 8

117v = 1 - 6

100v = 2 - 6

Notice that these settings cannot be made on machines produced according to UL standard (US version).

NOTE: Never connect the fluorescent supply to other contact.

If you intend to change the power voltage to a higher voltage (e.g. from 117v to 230v) it is recommended to use a subtransformer for the fluorescent lamps or change the ballast according to the used voltage (e.g. for 230v).

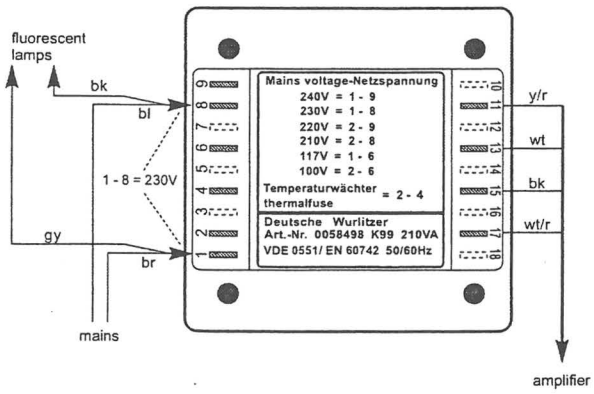

7 Position of fuses and plug connectors on the K99

Fuses used on the amplifier board are DIN41571 5x20 slow blow or medium blow in the US version 6x32 slow blow.
Value of used fuses is printed on the amplifier cover. Please replace only with same type and rating fuses.

The fuse holders on the amplifier P.C.B. are capable to hold fuses of 6x32mm or 5x20mm size.

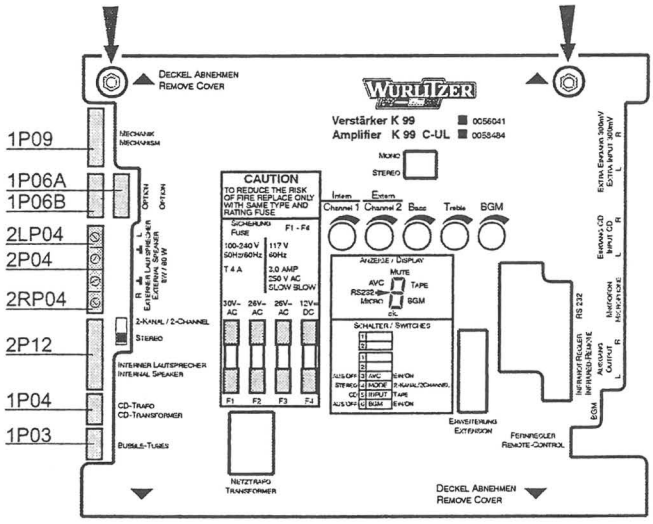

You will find the fuses behind the amplifier cover plate. To remove the plate first unplug the cable coming from the mains transformer and cable to the IR remote control. Next lose slightly both nuts on top of the amplifier accessible through the holes in the cover plate (arrows). To remove the plate first take the bottom side out of its hinges and then the top side.

Connection plan of the plug terminals:

- 1P09 - mechanism, SCC unit
- 1P06A - option
- 1P06B - RIAA decoder
- 2LP04 - external speakers, LH
- 2P04 - external speakers, ground
- 2RP04 - external speakers, RH
- 2P12 - Internal speakers
- 1P03 - bubble tubes

Fuse	Failure
Main fuse T 3,15 resp. F6 A for 110/117 V.	No illumination, machine completely dead.
Fuse F1: T4A supply 30V ~	Credit circuit via LED M is interrupted. If credits are still in memory or free play is programmed.
Fuse F2: T4A supply 26V ~ Fuse F3: T4A supply 26V ~	The colour tubes of the One More Time do not rotate, the heating of the bubble tubes is off - no bubbles will appear. Possibly defect of the power stage of the amplifier.
Fuse F4: T4A supply +12 V=	SCC unit dead - digital display dark (except red LED M still lighting up on coin insertion). The LED's K and Z on the SCC unit are dark. No initialisations run after power ON. The status display on the amplifier is dark.

8 The first power ON

The mains switch is located at the rear side of the jukebox. Wallboxes are equipped with an external mains switch accessible from the side. In position 'I' jukebox and amplifier are switched on.

Up to approx. 1 sec. after power on random segments of the status display will light. Followed by displaying the version number of the amplifier software (1.0, or higher). Than the bottom segment for "ok." and the upper segment for MUTE will light. The amplifier is now in STANDBY MODE. Depending on other enabled options more segments may light as well (e.g. AVC).

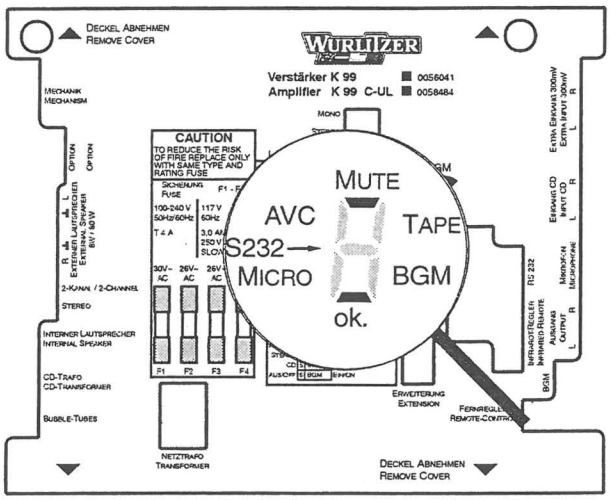

9 Volume control

You can control the volume of the jukebox from different points at the same time:

- With the pots Channel 1 and Channel 2 on the amplifier.
- With an optional available IR remote control.
- With the pots of the control box at the rear side of the jukebox.

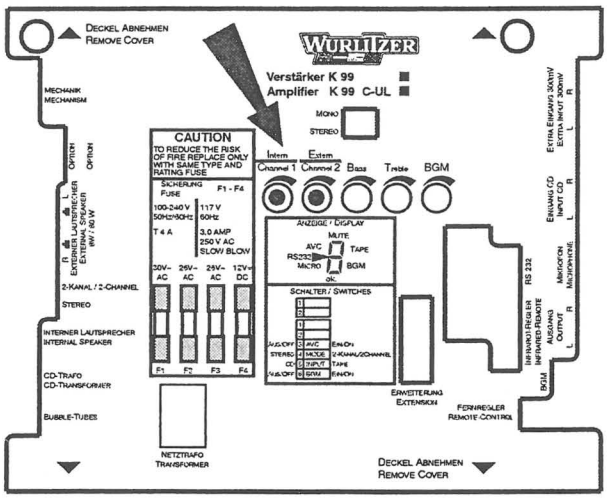

The device from which the volume is changed determines it.

The volume control box can be taken out and be used as a remote control. Its cable may be extended as required with any kind of wire. The voltages of the control wires are max. 5v DC.

The control box has two volume knobs (Intern / Channel 1 and Extern / Channel 2). In position "Stereo" the knob "Intern / Channel 1" is effective for the internal speakers. The knob Extern / Channel 2 is controlling the volume of the RCA outputs for an optional external amplifier. In position "2 Channel", channel1 (RH) and 2 (LH) can be controlled separately.

ATTENTION! The pots Channel 1 and Channel 2 on the amplifier are not effective and can still be used although the wire control box is connected.

10 The infrared remote control

An infrared remote control is installed from factory or can be delivered as conversion kit (part no. 0058809). If it has been installed the hand transmitter is located in the cash box.

If credit is given or free play is programmed a record can be selected with the buttons 0 to 9 and R.

Double button functions as required in the service programs (i.e. press button 5 -hold down- and press button R), are impossible. For this you can only use the keyboard of the jukebox.

You can control the volume by means of the buttons + and -. In stereo mode the internal +/- buttons control the volume of the internal speakers. The external +/- buttons control the volume of the K99 RCA jacks for an optional external amplifier. In 2-channel mode these buttons control the volume of the external speakers connected to the amplifier.

The power-on volume level is always set by the channel 1 and 2 pots on the amplifier or on the external volume control box.

Batteries are included: 4 micro cells type LR03 (AAA).

To open the battery compartment move the cover like shown in the picture.

Type and position of the batteries are also shown in the drawing.

Part no. of the hand transmitter: 0059745.

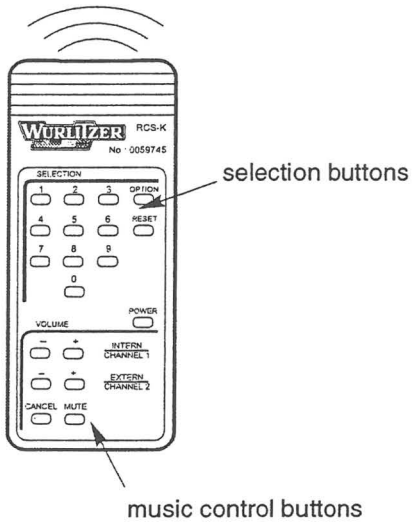

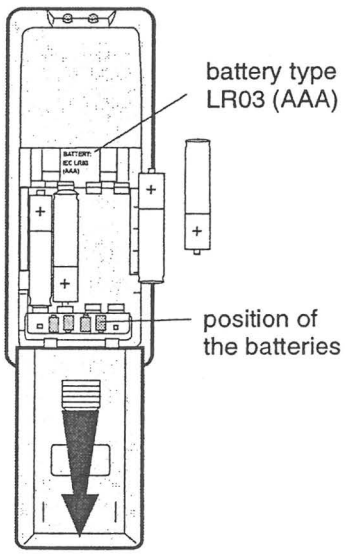

11 Treble and bass control

Sound control can be made by the bass and treble pots on the amplifier.

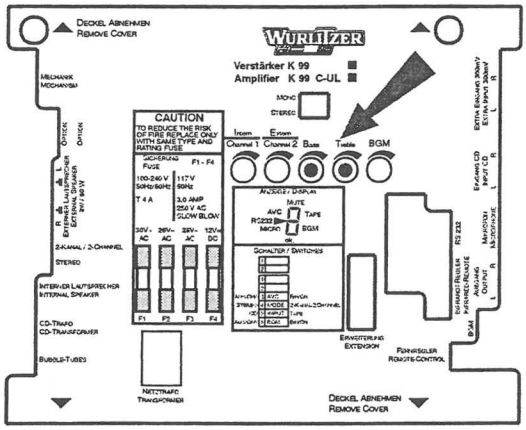

12 Automatic volume correction

The AVC sets records with different volume levels to an equal level. The level of records with a high level will be reduced; the level of low-levelled records will be increased. This control works rather slow to save the dynamic range of the track.

You can enable the correction with the DIP switch "AVC" on the amplifier board. Factory preset is AVC disabled.

With the second DIP of the 6 sw. group you can reduce the intensity of volume correction.

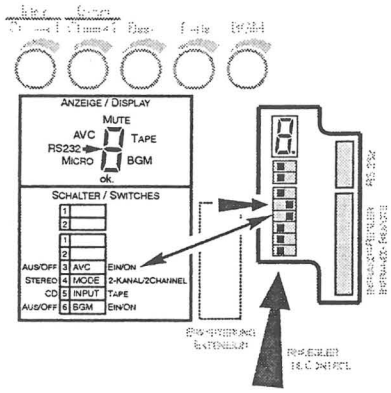

13 Background Music - volume attenuation

Complete function is only available for CD models.

You can switch on "BGM" by means of the DIP switch "BGM". The RH bottom segment of the status display on the amplifier indicates "BGM active". You can adjust the volume attenuation with the pot "BGM", as long it is active.

This function can be used to limit the maximum output volume.

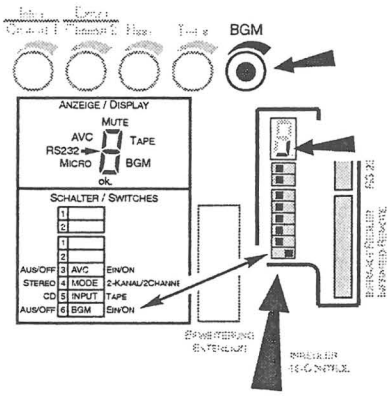

14 External speaker connection

The amplifier can operate in two different modes. The normal operation mode reproduces the music in normal stereo sound. So external speakers can be added to each channel.

The so-called 2Channel mode uses both stereo channels like separate mono amplifiers so that the sound can be reproduced in different rooms but then in mono only.

The amplifier may not be loaded with more than 4 ohms per channel (less ohms means more load!). On an overload it switches itself off. After a certain cool down time it switches itself on. So if you do not eliminate the reason for the overload the amplifier produces continuously volume dropouts.

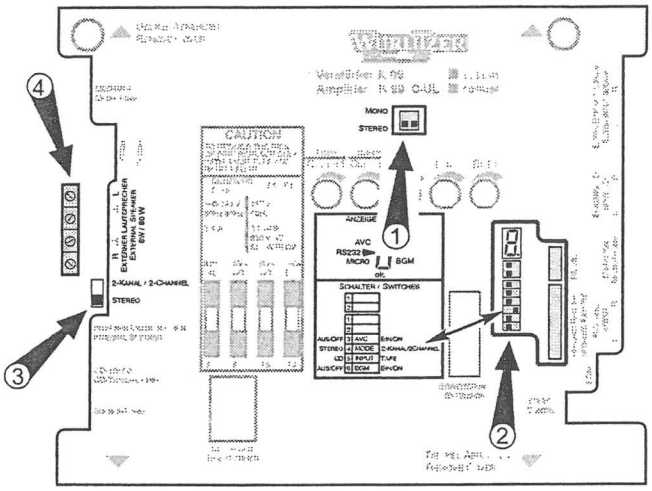

Position of the Stereo - Mono DIP switch (1), the mode switch (2), the stereo - 2 channel switch (3) and external speaker terminals (4).

The impedance of all external speakers per channel in "Stereo" mode should not be less than 8 ohms, because the internal speakers represent a load of already 8 ohms per channel. If the amplifier is operating in 2-Channel mode, the internal speakers are all connected to the RH channel (Channel 1); the LH channel (Channel 2) now applying to the screw terminals "Externer Lautsprecher - External speakers" may be loaded with max. 4 ohms.

The output power of the amplifier is approx. 55 watts (rms on max. 1% dist.) on a 4 ohms speaker per channel, 18 watts to a 12 ohms speaker and approx. 9 watts to a 24 ohms speaker. That means, that e.g., a 12 ohms speaker connected to the external channel at Dual Channel operation must be a type of at least 18 Watts, otherwise the speaker is in danger of destruction at higher volumes. Note that speaker groups like in hi-fi boxes may have, at certain frequencies, impedance's much lower than their rating. Make sure that all speakers are connected in correct polarity.

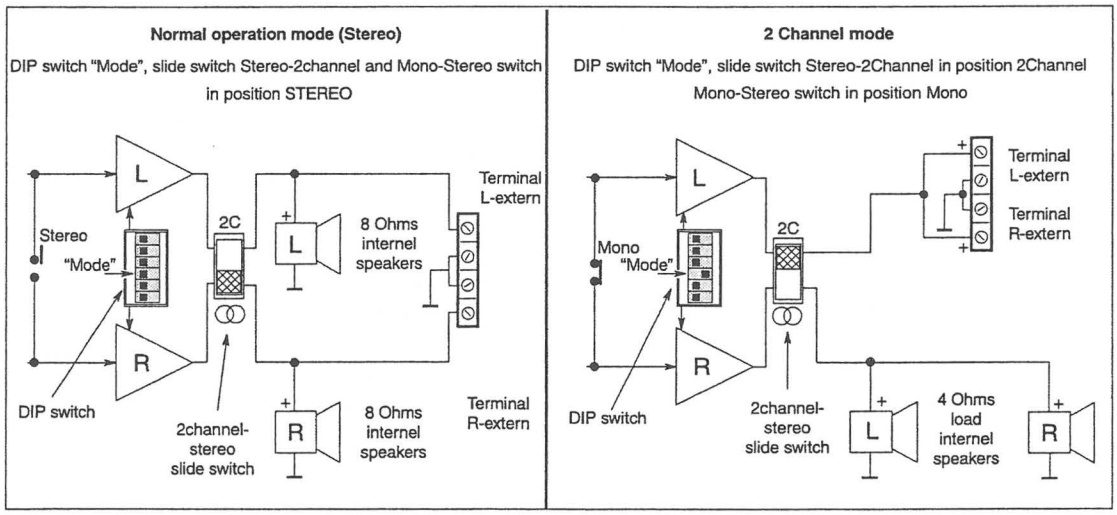

NOTE: Connect external speakers to the screw terminals on the LH amplifier in 2-Channel mode only!

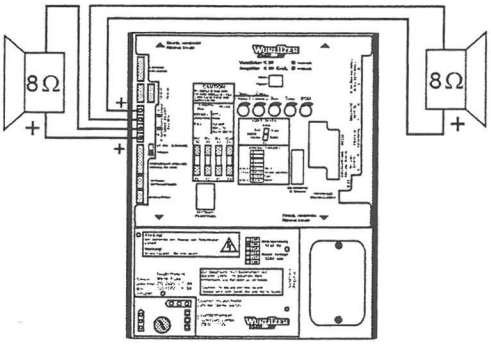

In Stereo mode do not connect a single speaker with less than 8ohm to each channel.

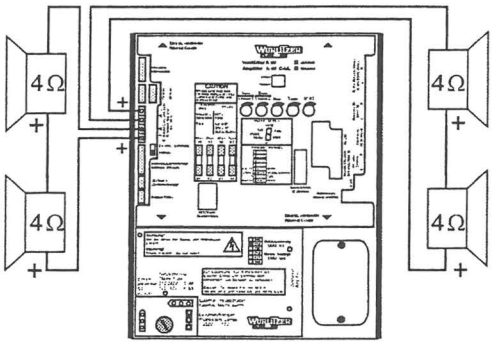

Two speakers of 4ohm (serie) also represent total impedance of 8ohm.

15 External amplifier connection

The RCA terminals "Ausgang - Output" you can be connected to a line input of an external amplifier. In Stereo mode the output level is normally controlled by means of the pot for the 2nd channel. Alternatively you can set the first DIP switch (1) to ON to couple this output to the normal volume control knobs (1st channel), so that both amplifiers can be controlled together.

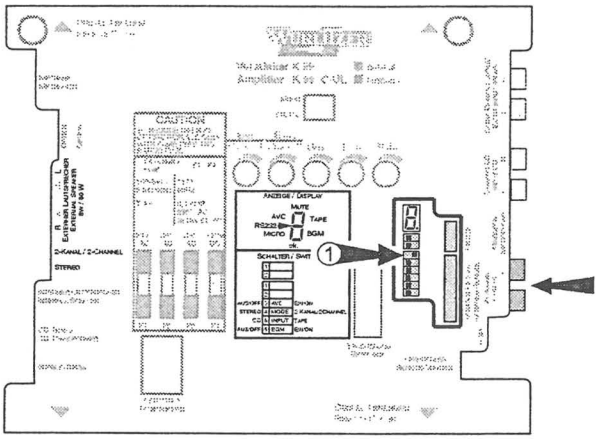

Connecting an external amplifier in 2-channel mode is not useful.

To avoid hum- (earth-) loops try to use an external amplifier with ground lift; it has no earth contacts. If it is impossible (e.g. receivers with cable supply) you can separate both amps by means of the ground isolator part no. 0053300.

The signal of the RCA terminals is also controlled by the settings of bass, treble, BGM, AVC and Mute.

16 Disabling the internal mute circuit

With the optional BGM-Connector (part no. 0048130) you can connect an external source to the jukebox with automatic switch over. In this case the amplifier should not be muted during standby of the jukebox.

To reach this disable the internal mute circuit by setting the first DIP switch (1) "Mute" to OFF.

For more information about the BGM connector please order the Wurlitzer technical information leaflets TI-MA-116.

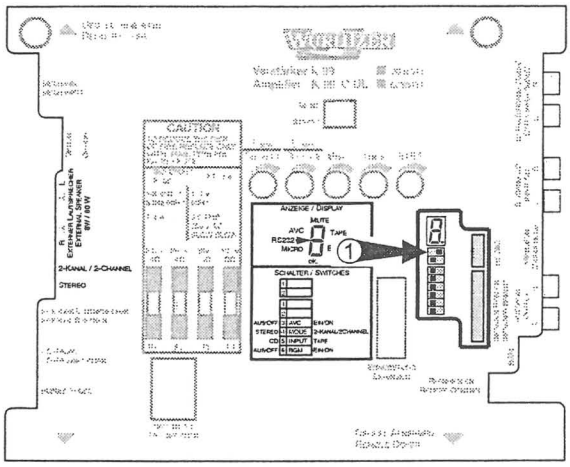

17 Input selector

With DIP switch (1) you can set either CD or tape input as active.

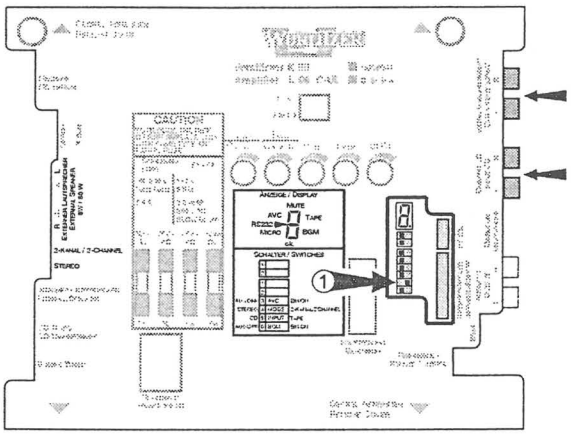

18 Trouble shooting chart

18.1 Failures of the illumination, lamps and power system generally

Symptom	Cause	Possible faults
• No light, jukebox not working at all	• No power at wall socket • Open primary circuit	• House fuse blown. • Mains switch off or defective. • Fuse of the jukebox Si1 blown, refer to chapter 18.2, on page 19 • Defective power cord or plug
• Fluorescent tubes do not light, jukebox working	• defective circuit, refer to chapter 18.9.1, on page 25	• Lamps circuit plug not in light socket at amplifier • Tube not properly seated in holder • Defective starter, defective tube
• One or more of the lights of the display do not light up, jukebox working	• Lamps' circuit open	• Bulb defective • Defective lamp socket • Defective plug BROWN or its wiring resp. • Defect inside the S&CC, e.g. lamp driver transistor
• All lights of the display are dark, jukebox working	• Supply or common return of lamps' circuit open	• Plug to the digital lights • Wire +30v broken (plug BROWN, pole 6, white line) • External short in lamps circuit has tripped T5 (inside S&CC), this disables IC14 to protect lamp driver transistors • Lamps of too high current rating • No 30VAC S&CC supply via pole 1, plug RED, 30v rectifier D7 defective (this, however, disables the coin acceptance also)
• Digital display remains dark, jukebox working	• Display signal circuit interrupted	• 14-pole D.I.L. plug not in place or wrong way round
• Digital display shows nonsens figures	• Signal lines interchanged	• 14-pole D.I.L. plug to display displaced not in line with base • S&CC defective, e.g. IC23
• Digital display shows incomplete figures (missing segment) The fault is the same with all three digits.	• Signal for one (or more) segments missing	• One (or more) of 14-pole plug(s) broken off • One (or more) wire(s) of flat cable broken • Broken connection at display PC-board • S&CC defective, e.g. IC23
• Digital display shows incomplete figures (missing segment) The fault, however, occurs with one of the three digits only	• Segment signal does not reach this digit	• Cracked conductor on display PC-board • Defective display unit (3 identical one-digit units)
• One of the digits of the display completely off	• Multiplex signal missing	• Defective plug to display or broken wire (A1, A2, A3) • S&CC defective (T6, T7, T8) • Defective display element

18.2 Fuses of the power supply - which one controls what circuit

The fuse holders on all boards are captable to hold either 5x20mm fuses of DIN41571 standard or fuses of 6x32mm size.

The mains fuse holder will hold either 5x20 or 6x32mm fuse depending on the screw cap used.

ATTENTION!
Please replace fuses only with same type and rating!

		Symptoms, if blown
• Mains fuse	• (in-screw cap holder in chassis pan apron) T 3.15 (F6.3 in U.S. version)	• No illumination, jukebox completely dead
• Fuse F2 or F3	• 30v negative supply	• Amplifier distorting on both channels, green LED 1 not lit • With the changer, solenoid M3 (carrier latch) and M6 (a-side) not working
• Fuse F2 or F3	• 30v positive supply	• Amplifier silent • Gear motor no working
• Fuse F4	• 12v positive supply	• S&CC dead (except red LED-M still lighting up on coin insertion
• Fuse F1	• 30v AC supply	• Record carrier motor and turntable motor PM both not working • S&CC not registering coins (red LED-M not lighting up)
• Fuses on interface front door	• 25v AC supply	• Both rotating cylinders not turning, bubble tubes not heating, lamp in grill not lighting

18.3 Faults with the coin and credit system

The jukebox, however, normally operates with credits established with the Free Credit button (located above the coin switches) resp. on the coin acceptor interface or by inserting coins.

The function of the coin system can be checked by observing the LED 'M' at the S&CC, which should light up with every coin accepted as well as every time Free Credit button is actuated.

Symptom	Cause	Possible faults
• All coins are rejected	• Disabled coin acceptor	• Missing power supply (green LED on interface is OFF) • Dirt, oil, an odd article in the rejector, rejector maladjusted or defective • Binding reject rod assembly holding rejector gate open • Rejector or entire jukebox not leveled
• Wrong credits (or none) with one type of coin	• Coin actuates the wrong coin switch (US version) • Coin pulse does not reach the S&CC	• Slug rejector not properly positioned, leading the coin into the wrong switch paddle or bypassing it (US version) • One line of the Coin-Switches-to-S&CC cable broken, disconnected at either end or wrongly set at S&CC connector • S&CC defective (IC17 - IC19, diodes D14 - D24)
• Permanent credit, display shows 01 permanently, free selections	• Jumper is set from 0 to F (free play)	
• Play prices not according to installed label	• Programming mistake	• Wire jumper not in right position, refer to the examples • Programming jumper making poor contact (such can change pricing only after the unit had been switched off or the 'LT' button had been actuated
• No credit although coins are properly accepted • Free play, with GP jumper 0-F still possible	• All coin input lines disabled (LED does not light up)	• Connect coin input lines to S&CC according to credit programming see chapt. 3.5 on page 8. • S&CC defective (e.g. diode 1 interrupted)
• No credit although coins are registered (LED-M lights up) • Even no free play credit with GP jumper set 0 to F	• S&CC out of operation	• No power supplied to the S&CC, check fuse F4, see also chapter 18.2, on page 19 • S&CC defective

18.4 Faults with the selection system (Credit system is working)

Symptom	Cause	Possible faults
• No selections, number of actuated keys not displayed (credits available)	• Open or shorted circuits in the keyboard wiring	• Plug YELLOW displaced or not deep enough inserted • Key RESET permanently closed or shortened to ground (pole 12, brown, plug YELLOW)
• No selections. After insertion of coins a number appears in the LH (hundreds) digit, but selection keys are disabled. With insertion of further coins credits are displayed properly.	• Permanent signal from the selection key which number appears in the dsiplay	• Jammed key, permanently closed key contact • Wire of this key shortened to ground
• No response from one (or more) key(s)	• Open circuit with this key(s)	• Malfunction of the key contact • Broken wire to keyboard • Plug YELLOW not correctly seated • S&CC defective
• The record played is not the one selected. The selection was properly displayed, and the 'RECORD PLAYING' display is the same	• Improper counting of the record carriers' position	• Wrong adjustment of light control gates (refer to chapter 18.9.3 and chapter 18.9.4, on page 26) • Interference pulses counted as carrier pulses • Illumination light affecting the Z light gate, reflections at the edges of carrier base plate
• The record played is not the one selected. The selection was properly displayed, and the 'RECORD PLAYING' display is showing the actually playing record	• Record carrier does not stop in the correct porsition	• Record carrier latch delayed by mechanical friction • record carrier latch too wide (latching to late) • Light control gate Z retarded, refer to chapter 18.9.3 and chapter 18.9.4, on page 26 for proper adjustment
• The selected record will not be played. Instead the record carrier rotates contiuously, however, it stops if 'BLUE' plug is pulled at the S&CC	• Light gate signal Z (counting) or K (carrier position 1) or both missing	• Lamp of light gate defective • Broken line in the wire to plug BLACK • See notes of chapter 18.9.3 and chapter 18.9.4, on page 26

18.5 Repetitive play of records, selected or non-selected ones

Symptom	Cause	Possible faults
• Repetitive play of one record with the record carrier not making a rotation between plays. This continues even if 'BLUE'plug is disconnected at the S&CC.	• Main cam motor not stopping at the end of the play cycle	• Braking resistor R10 (47ohms) at motor MM open • Wiper switch K6 maladjusted
• Repetitive play of one record, discontinued after plug 'BLUE' is pulled at the S&CC	• S&CC running out of program	• S&CC our of program routine, possibly caused by an interference pulse (cut power to the S&CC for a restart of program) • S&CC defective
• Gripper moves a record continuously (without having the record actually played)	• Motor MM has a permanent ground return	• Line blue to pole 2 of plug 'BLUE' shorted to ground • Wiper K6 shorted to ground • S&CC defective (Relay 2-M-permanently on, pull plug 'BLUE' to test this. Try service program, button 7 and observe relay 2 through hole M)

18.6 Failures of the record changer after properly completed selection

Symptom	Cause	Possible faults
• Record carrier continuously rotating, even after plug 'BLUE' is pulled. • If a selection is made the carrier will be jammed when the gripper arm tries to grip a record	• Stop pawl arm permanently open	• carrier latch or its solenoid jammed
• Record carrier continuously rotating • If a selection is made the record played is one placed about 10 compartments behind the selected one	• Stop pawl arm solenoid permanently switched on	• Grey line from M3 to pole 4 of plug 'BLUE' shorted to ground (= fault does persist if plug 'BLUE' is pulled) • Relay 4 of the S&CC jammed or permanently switched on (= carrier stops as soon as plug 'BLUE' is pulled)
• Carrier does not start after a properly completed selection • Stop pawl arm does not open	• Stop pawl arm not activated	• DC supply -30v missing (fuse F2 or F3) • Coil of latch solenoid M3 open • Grey line from M3 to pole 4 or green line to pole 1 (relays common), plug 'BLUE' interrupted • S&CC defective. Go to service program, key 8, to check relay 2 -M3-. Test machine with a programming jumper from pole 1 (green) to pole 4 (grey) (refer to chapter 18.9.12, on page 28)
• Record carrier does not rotate although the carrier latch opens after a selection	• Carrier motor KM disabled	• Microswitch M3 (at carrier latch) maladjusted or defective) • Microswitch K8 (at gripper arm) maladjusted or gripper arm not full in rest position (refer to chapter 18.9.6, on page 27) • Defective motor KM, broken wiring
• A-side selections (odd numbers) are not played but the B-side of selected record is played instead	• M6 shift solenoid and/or shift rod not working	• M6 coil open, M6 circuit open (refer to chapter 18.9.7, on page 27) • Pole 3 (violet wire) of plug 'BLUE' not making contact. To check this, plull plug 'BLUE' and insert a jumper wire (programming jumper of the S&CC) from pole 1 (green) to pole 3 (violet). If M6 is energized now, the fault is inside the S&CC (e.g. relay 3 -M6- is not working)
• Gripper arm does not move to take the record out of the carrier although the carrier has stopped at the correct position. After approx. 3 seconds the carrier moves to the next selection if further selections have been made	• Main cam motor MM does not start	• Motor MM defective, resistor R15 (18ohms) open, no DC +30v to the motor (fuse Si4), interruption with the blue line from amplifier to motor • Short within the motor or with capacitor C5 (in these cases R15 gets rather hot!) Pull plug 'BLUE' and set a jumper from pole 1 (green) to pole 2 (blue): if motor MM runs, the fault is within the S&CC • Relay 2 -MM- not working: go to service program and test with key 7

• Tone arm not moving to play record, selected record was properly brought to the turntable	• Main cam motor MM switched off too early • Mechanical fault with the tone arms' tracking linkage	• Wiper switch K6 defective or maladjusted (refer to chapter 18.9.9, on page 27) • Tone arm loose on shaft (two worm screws M3x4) • Linkage to tone arm control cam broken
• Turntable does not rotate, record to be played is properly brought to the turntable	• Turntable motor PM disabled, transmission disabled	• Transmission O-ring from motor to turntable broken or fallen off • Pulley freewheeling on motor shaft (worm screw M3x4) • Microswitch K8 not making contact after being released by record clamp • Defective turntable motor, open phase shift capacitor C18
• Record on turntable returned to carrier before play has commenced	• Main cam motor MM not resting when system is in play position	• Cancel button at amplifier jammed in 'cancel' position, same with cancel button of a remote control, shorted remote control cable • Tone arm trip switch K3 defective (jammed in trip position) • Resistor R10 at motor MM open (refer to chapter 18.9.6, on page 27)

18.7 Failures with the tone arm or the tone system

Symptom	Cause	Possible faults
• First second of music missing because pick-up jumps off starting groove	• Tone arm release lever and bushing assembly opening too late	• Tone arm release adjusting screw not far enough in
• Starting point of pick-up floating (varies from record to record)	• Tone arm release lever and bushing assembly opening too early or tone arm loose on shaft	• Tone arm release adjusting screw not far enough in. 2 worm screws M3x4 not tight
• Record not played completely - tone arm lifts off too early	• Main cam motor restarted too early by tone arm trip switch K3	• Tone arm trip switch K3 maladjusted. Remove adjusting screw to have play time extended
• Record playing but no sound from the speakers	• Defect in the system pick-up - amplifier - speakers	• Pick-up connector or speaker plug not set at amplifier • Fuse Si4 open (= +30vDC missing. This, however, would also disable motor MM) • Grey line (pole) of amplifier-to-changer cable broken off wiper K1 but shorted to ground

18.8 Record not properly returned to carrier

Symptom	Cause	Possible faults
• Gripper arm does not move to take the record home	• Main cam motor MM not starting	• Tone arm trip switch K3 not making, maladjusted or open circuited. Refer to chapter 18.7, on page 24 for faults if symptom could have developed while a record was playing
• Retuned record not properly unclamped (not freed) in the carrier	• Main cam motor MM switched off too early	• Wiper switch K6 wrongly adjusted (compare with symptom 4 in chapter 18.6, on page 23 and chapter 18.9.6, on page 27.
• Record missing in compartment is found in other compartment or somewhere about the chassis	• Gripper arm delayed and retarded by record binding with the turntable (refer to chapter 18.9.11, on page 27) • Gripper arm generally moving too fast	• Maladjusted turntable chassis linkage • Burr at the turntable pilot or at the records' centerring hole • Series resistor R15 (with motor MM) shorted

18.9 Notes

18.9.1 Note 1

The fluorescent lamps' circuit is based on 230v. Except with certain 'UL' models, there are always 230v at the lamps' socket on the amplifier panel independent to the factory set mains voltage! Lamp, starter and ballast is a matched group, never use replacements of other wattage! Check for a defective starter before you check for a defective lamp.

18.9.2 Note 2

Some actual low tension power readings (averages). **Numbers left** of/are effective (R.M.S.) values, read with a moving iron instrument. **Numbers right** of/are mean integrated values, read with a moving coil instrument.

	Changer & S&CC idling	Record carrier searching	Gripper arm towards A-side title*	Gripper arm towards B-side title*	Record playing at minimum volume
-30v	33.0 / 31.5	29.7 / 27.5	31.0 / 29.5	33.0 / 30.5	33.0 / 28.5**
+30v	33.0 / 31.5	30.5 / 29.5	31.5 / 29.0	32.0 / 30.0	33.0 / 28.5**
+12v, read at fuse F4	10.0 / 12.5	9.5 / 11.5	10.0 / 12.0	10.0 / 12.0	10.0 / 12.0
30v AC, read at fuse F1	31.5 / 29.5	29.5 / 27.5	31.0 / 29.5	31.0 / 29.5	31.5 / 29.5

All readings rounded for nearest full or half volt.

* Readings made while gripper arm is on the way from carrier towards turntable.

** At full volume these readings are around 1 volt lower.

Voltage readings directly at the S&CC against its chassis

Plug BROWN	pin 6 (brown)	+40v DC	voltage to indicator lamps
Plug RED	pin 1 (black)	30v AC	supply for S&CC
Plug RED	pin 2 (brown)	11v AC	supply for S&CC
Plug RED	pin 3 (red)	Zero V	ground & center for pin 1 and 2
Plug RED	pin 4 (orange)	11v AC	supply for S&CC

18.9.3 Note 3 A

A selected record can be located properly only as long as the light gate is working properly. The counting pulses can be checked easily by observing the LED indicator Z which has to light up rhythmically when the carrier is rotating (maually unlock the carrier latch for a check).
LED Z is dark whenever the carrier stops but has to light up as soon as a tooth tip of the carriers' base plate has passed the carrier latchs' front edge for about 1 - 2mm. For a check lift the carrier off its friction drive wheel a little, unlock the carrier latch with the other hand and advance the carrier slowly manually.

18.9.4 Note 3 B

The locating pulse '101' can be checked with the LED indicator. For a check bring the record preceding 101 beneath the gripper arm. Both K and Z then have to be dark. Do not mind if K is lit when the carrier rests with 101/102 beneath the gripper arm. Then advance the carrier slowly (lift off the drive as explained in note 3 A): K now has to light up by all means before Z but a very little advance in time is sufficient and K must still be alight when Z lights up. Which LED then goes out first does not matter but K by all means must be out before Z lights up agaon for the next record approching the gripper arm.
If K lights up behind Z, the S&CC cannot find its starting position and the record to be located will never be found, the carrier then rotates permanently. If K is still alight when Z lights up for 103/4, the S&CC will consider this one as 101 and any record located will be that one 'behind' the one actually selected.
The light gate assembly can be shifted for about 1mm to find a proper timing.

Four K-signals in succession without a selection played in between causes a memory erase same as if the LT button is actuated. Therefore, rotation checks with the carrier should be terminated with an actuation of LT to prevent complaints raised by the first patron making a selection after the service, that he lost his money bevause his selection led to the fourth K-signal in succession!

18.9.5 Note 3 C

The lamp of the light gates is one of 24volts, 3watts. The actual used voltage is reduced to about 12volts by a series resistor, or commencing with serial no. 6511 9514, by the 12volts regulator of the amplifier. The Phonotransistors of the light gates can be checked with an ohmmeter at plug BLACK when disconnected. read between poles 3 and 5 for the gate K and between poles 2 and 3 for gate Z. results will be obtained only if poles 2 or 5 res. are positive to 3, hence, interchange the poles for a test. With an open light gate the ohms reading should be below kilo-ohms and with the light broken it should be above 2 meg-ohms.

18.9.6 Note 4

Microswitch K8 is actuated by the large record clamp of the gripper arm. If this switch is maladjusted or if the main cam and gear box stops before this record clamp is fully reacted, K8 will not be actuated. This disables the changer for the next search run and keeps the turntable running all time (please also see 4th symptom in chapter 18.6, on page 23.
The same situation, however, can be produced by a main cam and gear box running the proper rest positions and stopping finally at a time when K8 is released again (please also see 2nd symptom in chapter 18.8, on page 25.

To test, actuate K8 manually and run the changer through some play cycles. The record clamp has to actuate K8 before it reaches the most retracted position and has come to rest before it has passed this position; compare the adjustment instructions.

If the system overruns the most retracted positionwith a K6 switch of proper adjustment, check R10, the braking resistor parallel to (and located at) the motor, it should not read more than 55ohms.

18.9.7 Note 5

The A-side solenoid M6 is in circuit for an A-side selection for about 3 seconds only, counted from the moment the carrier has stopped with the selected record beneath the gripper arm. Well within these 3 seconds the shift rod is locked in its A-side position by the holdout cam already. The shift rod is free to be moved manually at the time the changer is in idling position.

18.9.8 Note 6

With a dead motor MM check the carbon brushes. Used up brushes are not likely before some years of service, however, a lack of contact pressure is feasible (binding brush holder). Watch for the insulation ring at one end of brushs' tension spring. Without this ring the motor is shorted and resistor R15 will burn-out.

18.9.9 Note 7

A detail of circuit timing: Main cam motor MM is started by relay 2 of the S&CC for about 3 seconds. After this the transfer switch K6 should have made well within these 3 seconds. If K6 is maladjusted or defective, the main gripper arm is about half between the record carrier and the turntable.

18.9.10 Note 8

The amplifier muting is governed by an electronic circuit by transistor Tr2 and controlled by switch K1 via the grey line, pole 8, amplifier-to-changer cable. The amplifier is mute as long as this line is grounded, hence, the amplifier works outside the jukebox with microphone kit adapter without any need to alter the mute circuit.

18.9.11 Note 9

The gripper arm is linked with the cam & gear shaft by a two-way spring clutch. If the record is locked somehow with the turntable and the arm is unable to take it off, the gear box still does advance and load the clutch spring. Finally, the spring at a certain tension will free the record and then the arm flips to catch up. Then the record is thrown about and may land in a wrong compartment or anywhere.

A maladjusted turntable chassis linkage may force the turntable to far to the right, thus 'pinching' the record between the turntable pilot and the arms' upper clamp, especially if this is positioned deeper than the plane of the record. Such a situation may lock the system turntable (at pilot) - record - gripper arm.

With a main can & gear unit generally moving too fast, the arm may run the returning record into the neighbour compartment or even loose it. A complete gear cycle normally takes about 12 seconds, never permit time shorter than 10 seconds. To check time, make a selection and hold the cancel button (amplifier) down all the time the arm moves. Time is counted from the moment the record carrier stops until the homed record is unclamped and microswitch K8 is actuated.

If there is a second record in one compartment and the original record is selected, there is a 50% chance that the wrong one will be played. The service call to be expected in such case will be likely one of a 'wrong selection'.

When taking two records the gripper arm may lose the one of the smaller diameter and that may be the original one. This counts for the strange situation that a record is found laying about with another one found in that record compartment - a remote chance anyhow.

18.9.12 Note 10

Transistor T22 pulls its collector to L as soon as the negative supply of the changer appears at the switch of relay 4 thus indication that the record just been played is back now in the carrier. If this circuit is defective the S&CC does not sense this but 'thinks' the record is still playing. Hence it will not start a new search run although it has accepted coins and selections properly.

For a start short the collector of T22 to ground momentarily. An external test can be made via the service program, button 9. Typical for this fault is that a selection accepted will be played after the S&CC was switched off for a second or two.

19 Connection diagram

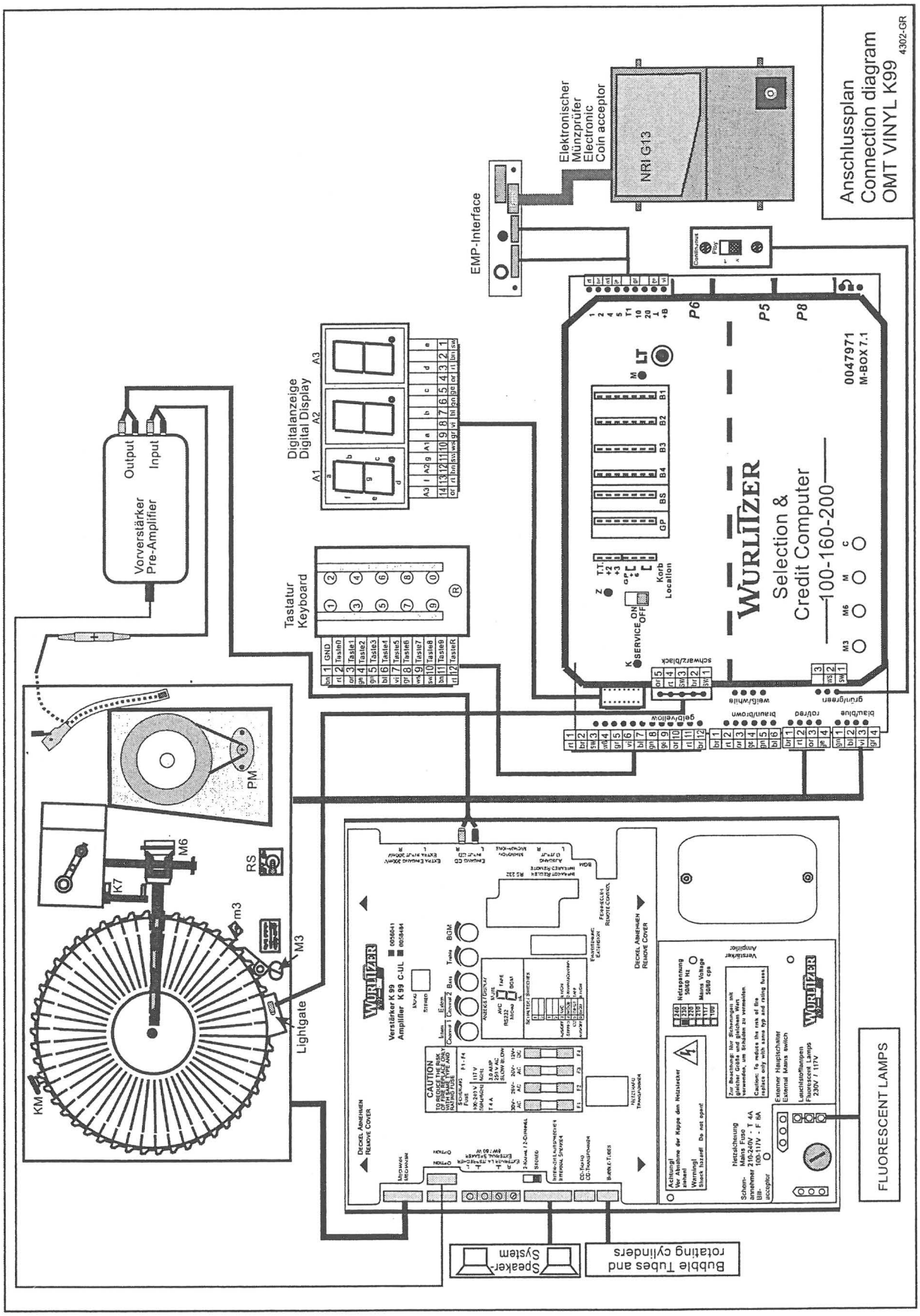

20 Circuit diagram OMT VINYL chassis

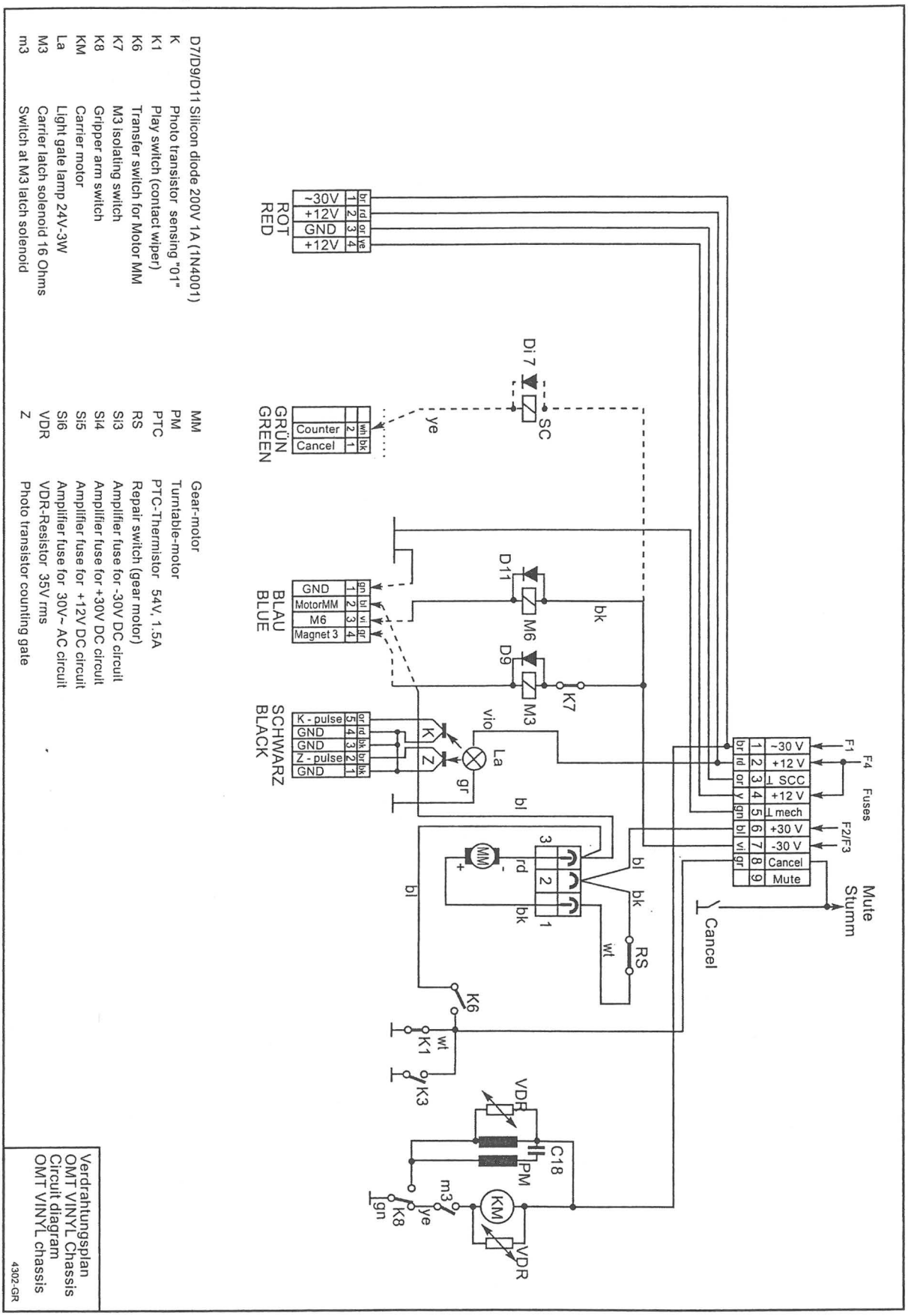

D7/D9/D11 Silicon diode 200V 1A (1N4001)
K Photo transistor sensing "01"
K1 Play switch (contact wiper)
K6 Transfer switch for Motor MM
K7 M3 isolating switch
K8 Gripper arm switch
KM Carrier motor
La Light gate lamp 24V-3W
M3 Carrier latch solenoid 16 Ohms
m3 Switch at M3 latch solenoid

MM Gear-motor
PM Turntable-motor
PTC PTC-Thermistor 54V, 1.5A
RS Repair switch (gear motor)
Si3 Amplifier fuse for -30V DC circuit
Si4 Amplifier fuse for +30V DC circuit
Si5 Amplifier fuse for +12V DC circuit
Si6 Amplifier fuse for 30V~ AC circuit
VDR VDR-Resistor 35V rms
Z Photo transistor counting gate

Verdrahtungsplan
OMT VINYL Chassis
Circuit diagram
OMT VINYL chassis
4302-GR

21 Wiring diagram K99 - power supply

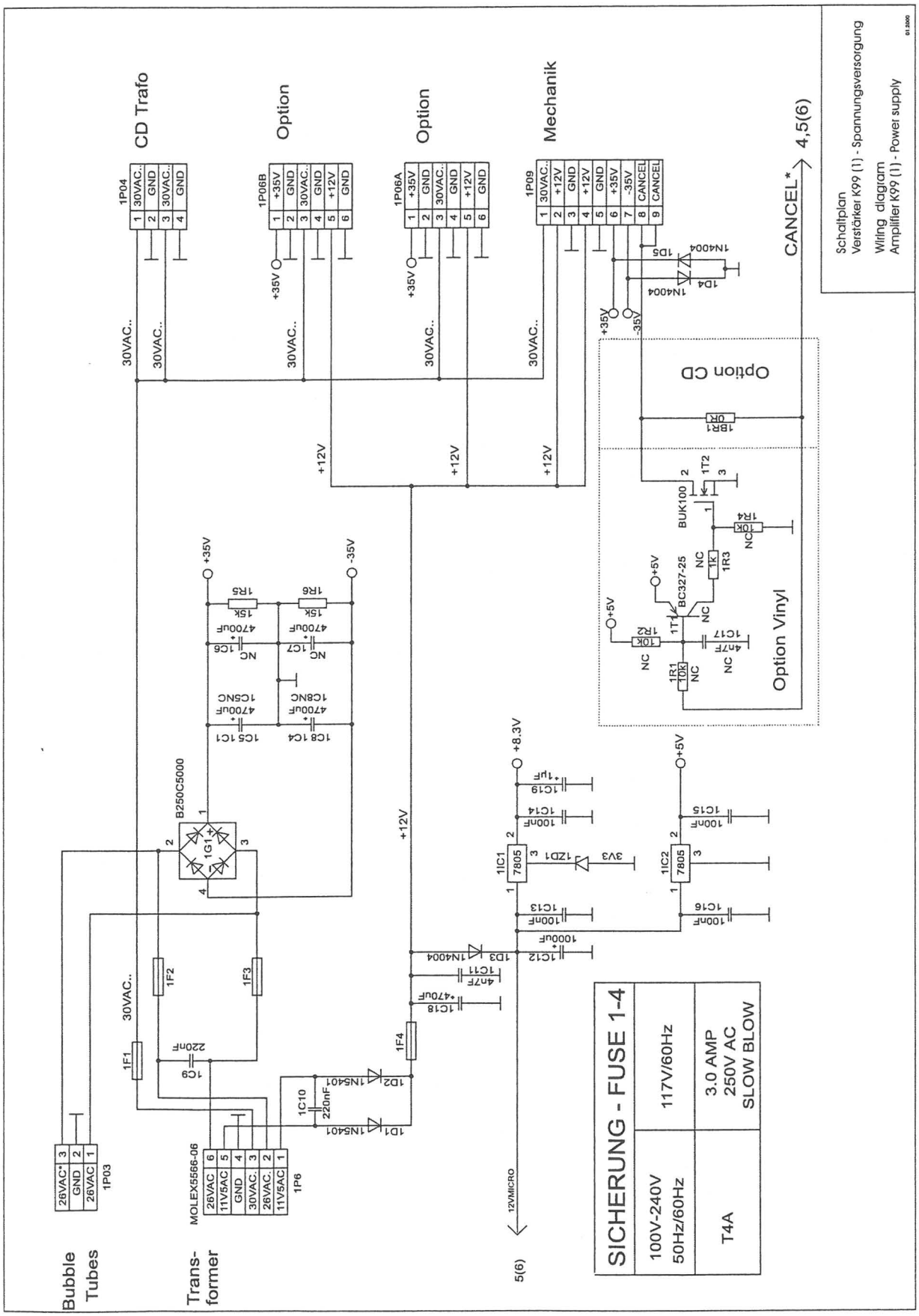

22 Wiring diagram K99 - power amp

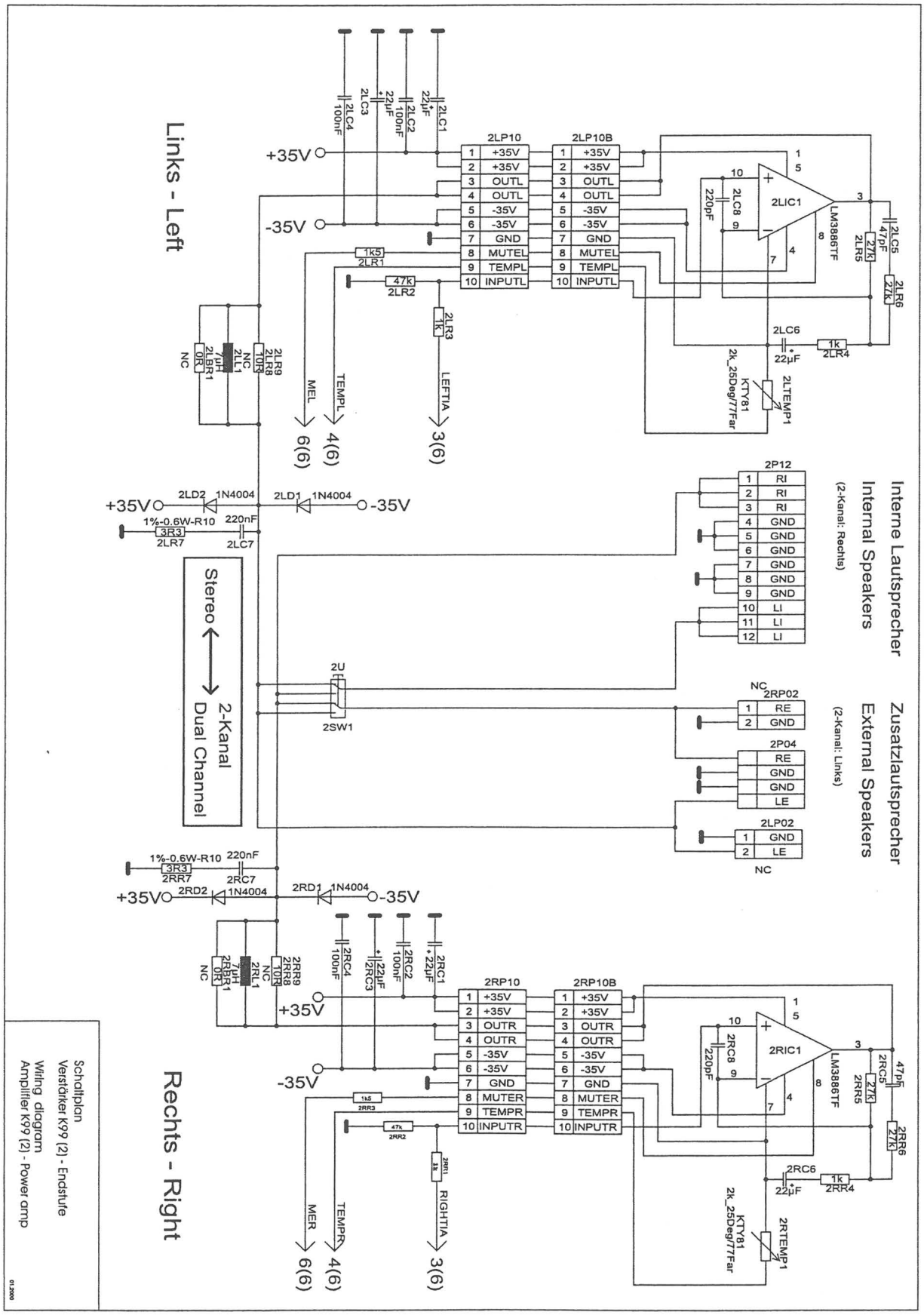

23 Wiring diagram K99 - pre amp

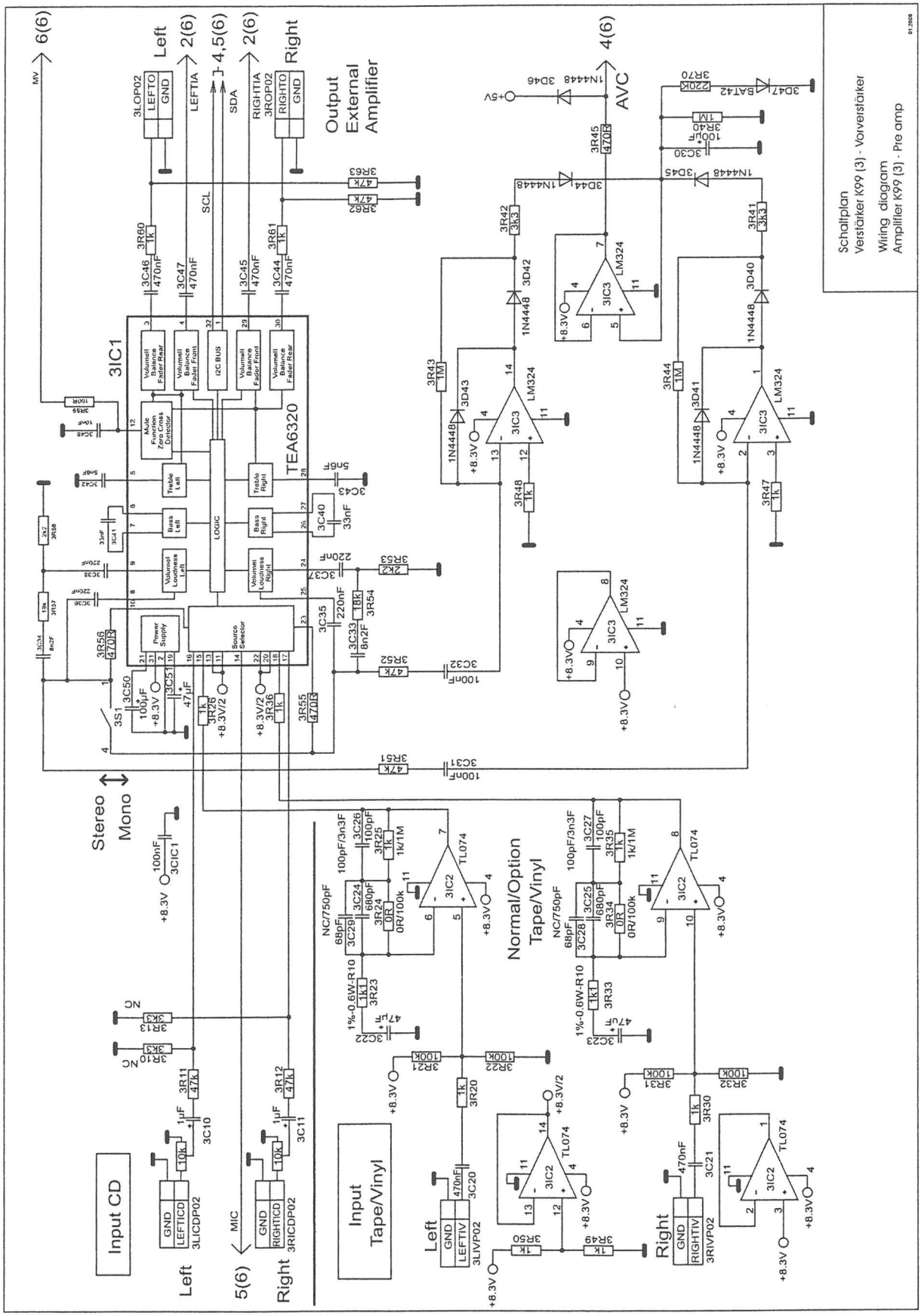

24 Wiring diagram K99 - sound controler

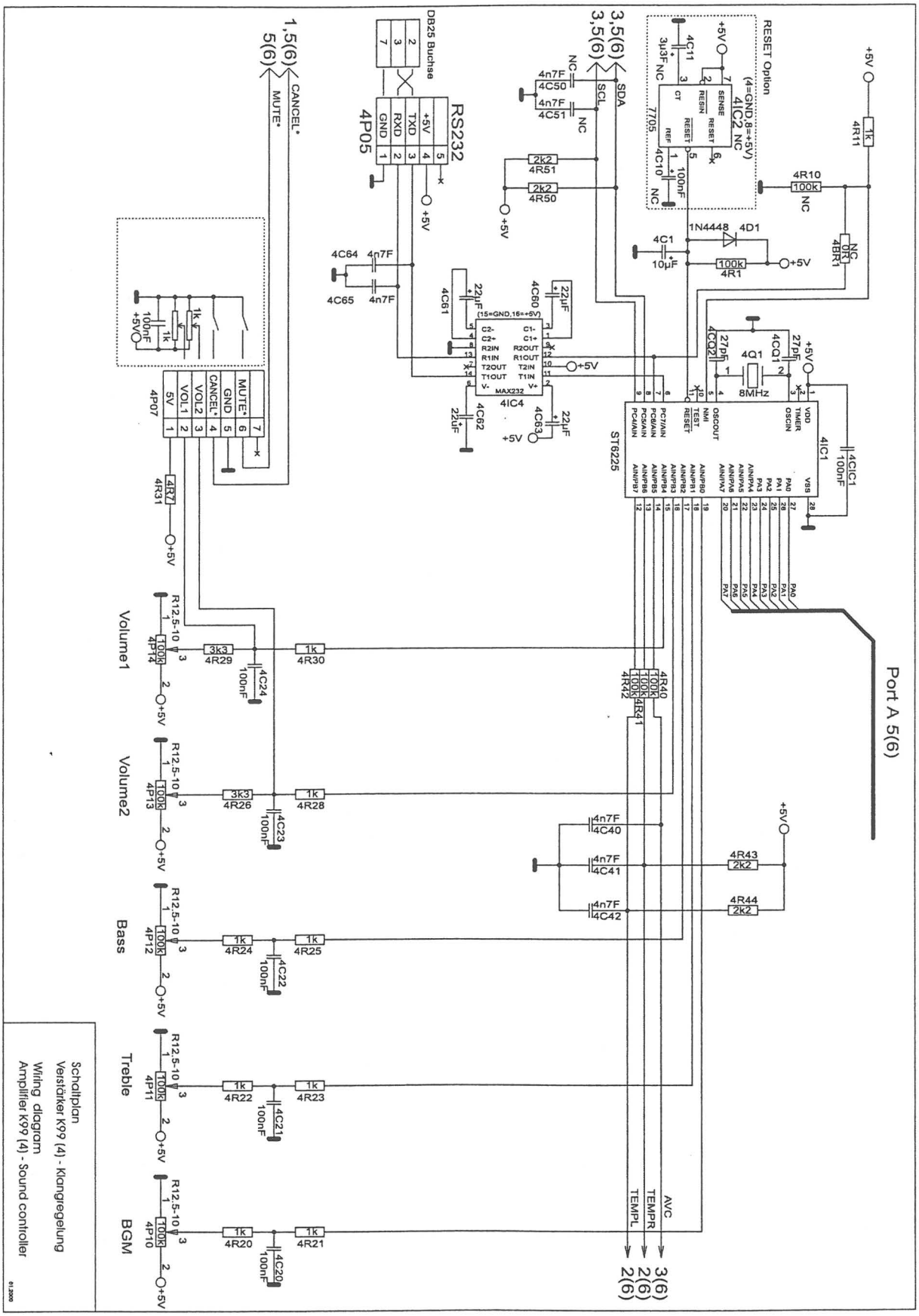

25 Wiring diagram K99 - port A

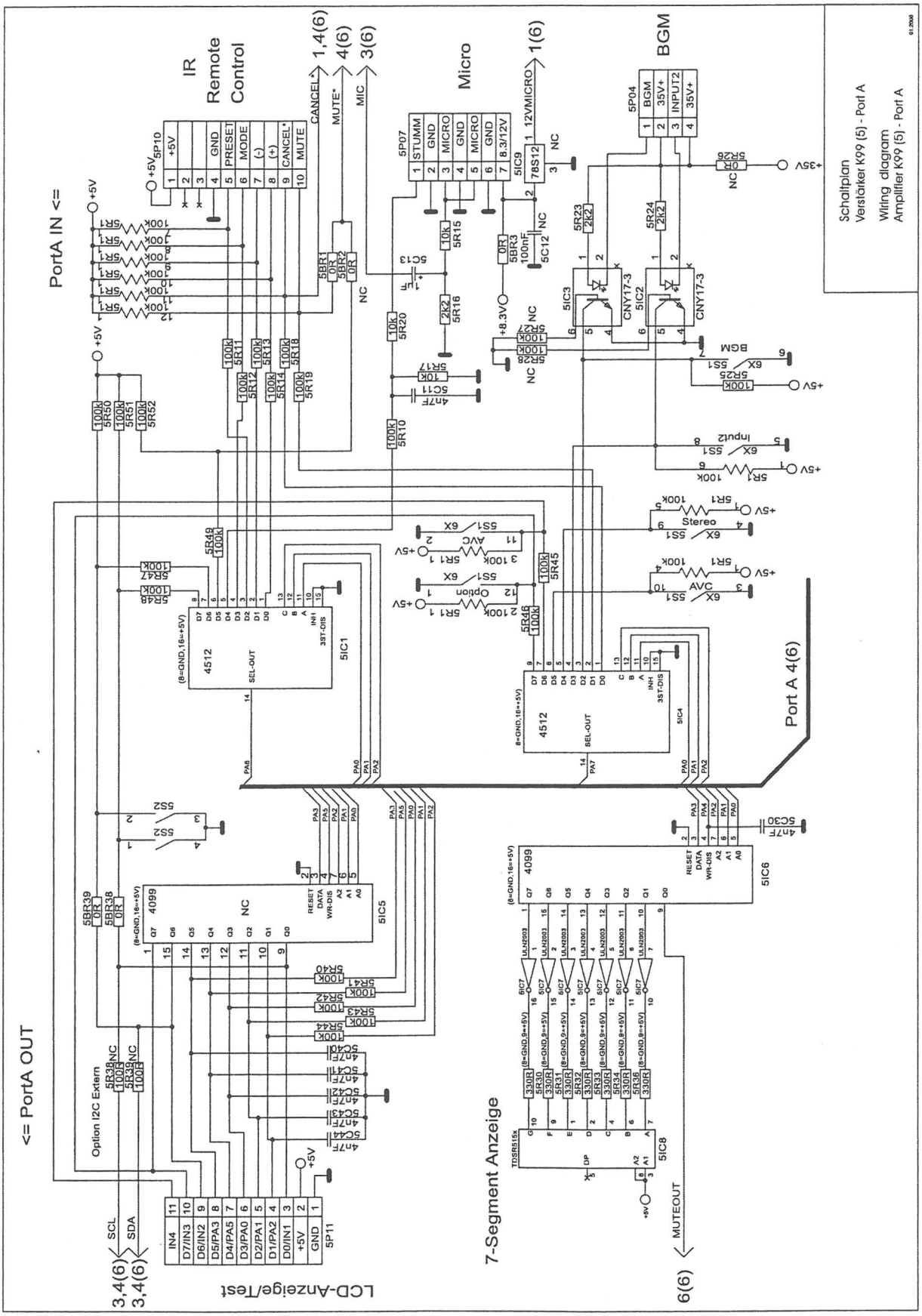

26 Wiring diagram K99 - mute

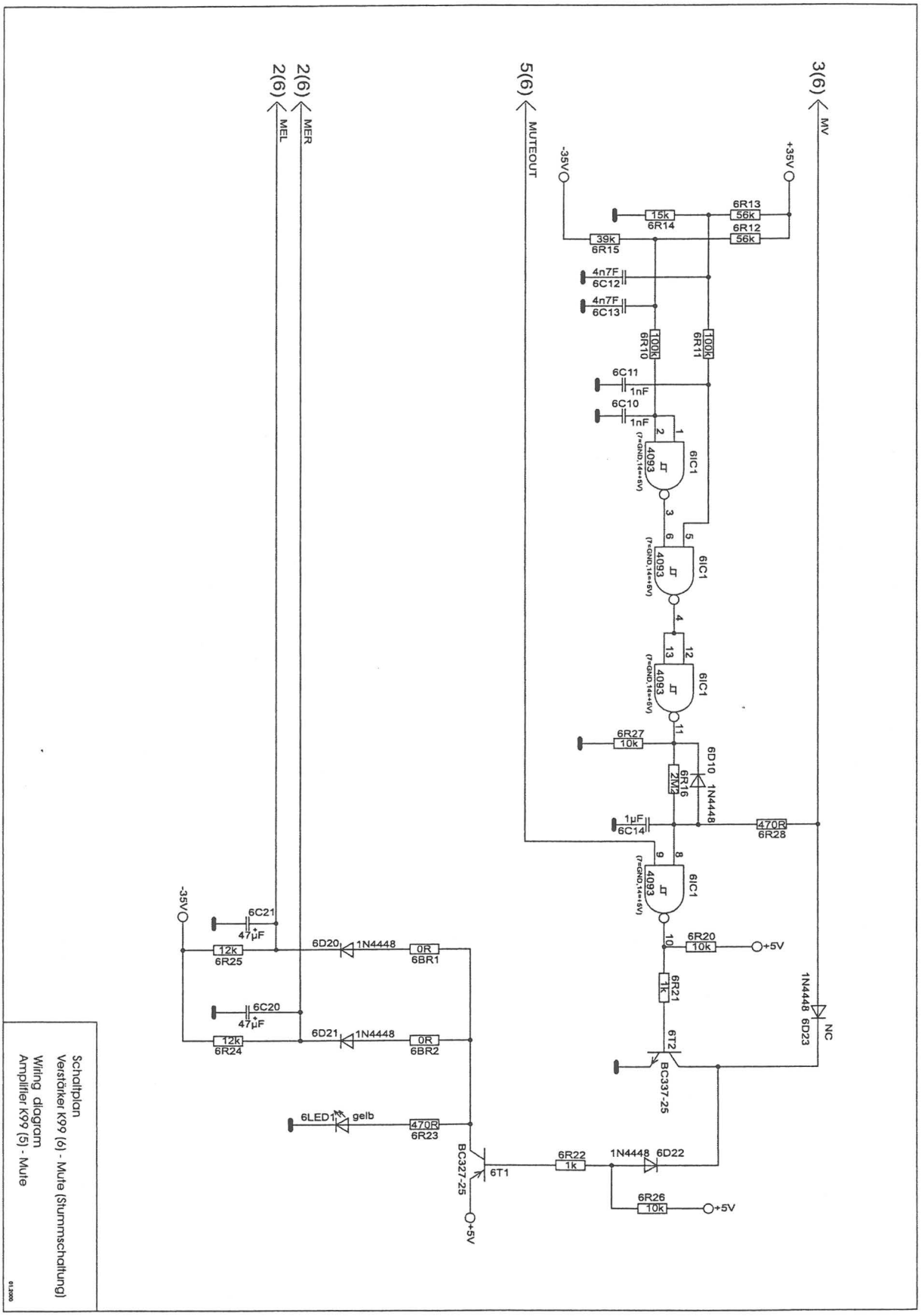

27 Wiring diagram K99 - power supply Euro 230V

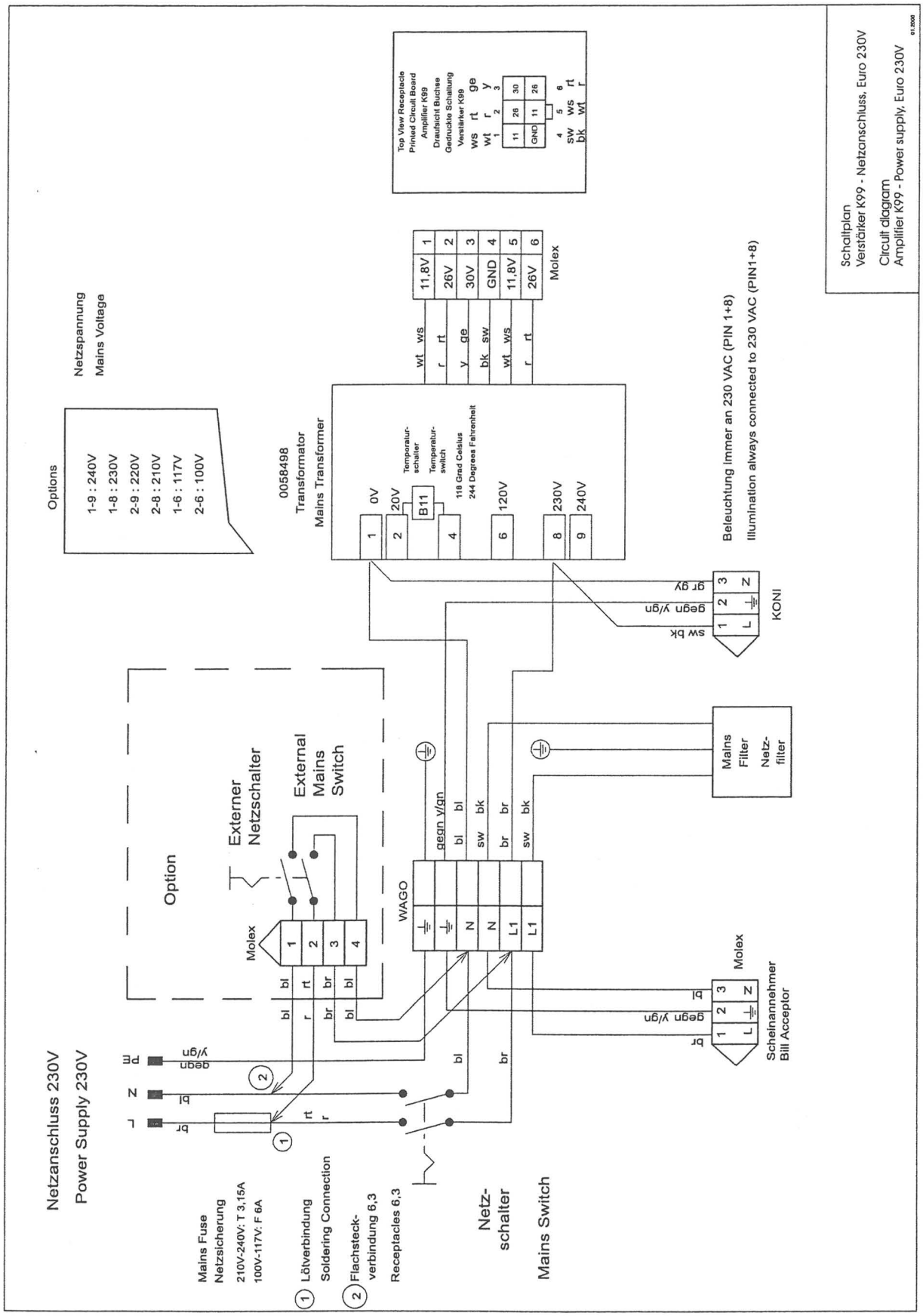

Wiring diagram K99 - power supply UL/USA 117V

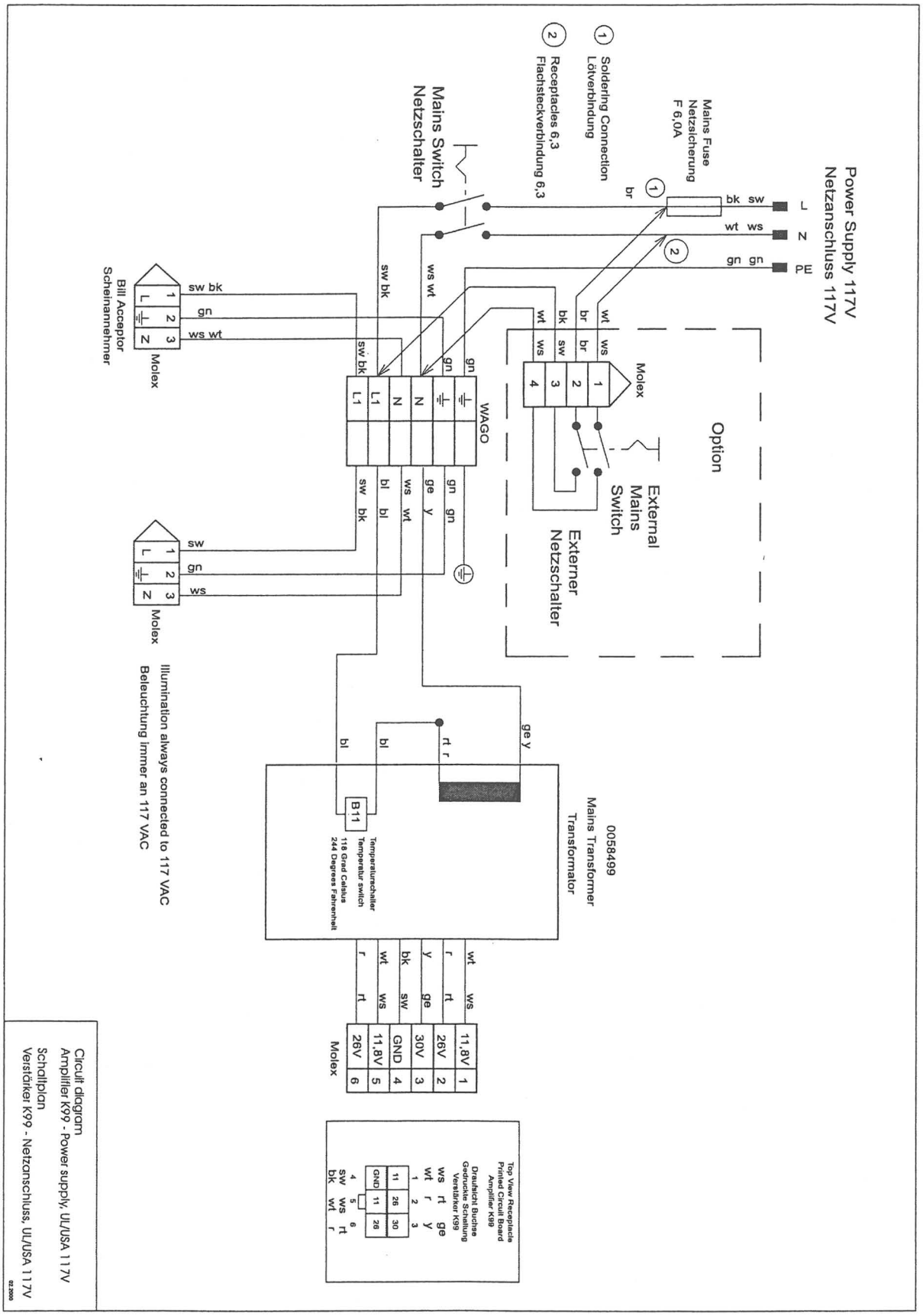

28 Connection diagram IR remote control/amplifier K99

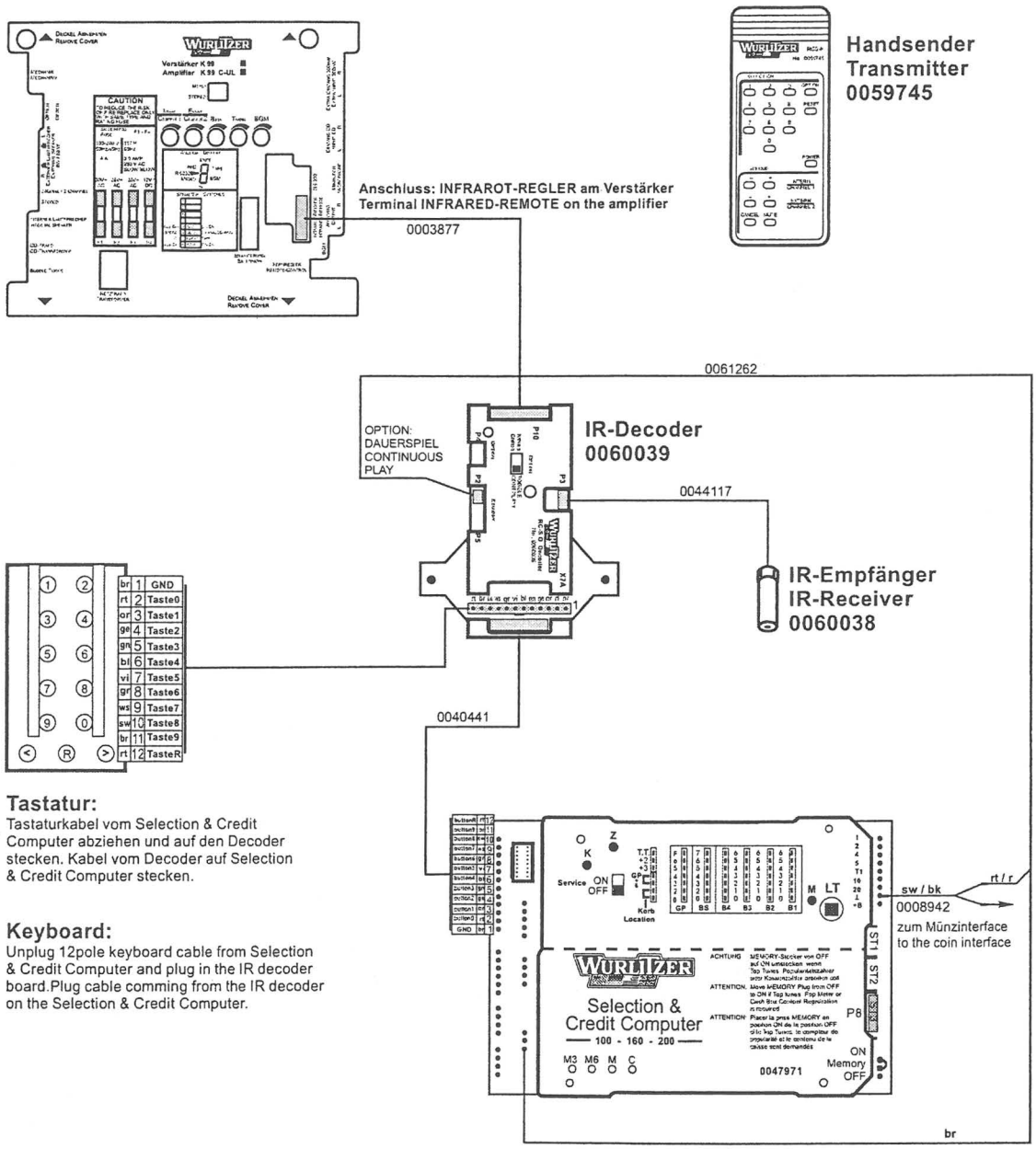

Tastatur:

Tastaturkabel vom Selection & Credit Computer abziehen und auf den Decoder stecken. Kabel vom Decoder auf Selection & Credit Computer stecken.

Keyboard:

Unplug 12pole keyboard cable from Selection & Credit Computer and plug in the IR decoder board.Plug cable comming from the IR decoder on the Selection & Credit Computer.

Anschlussplan für Infrarot-Fernregler
an den Verstärker K99

Connection diagram for infrared remote control
to the amplifier K99

4303-rs

29 Index

A
Automatic volume correction 14

B
Background Music 14

C
Connection plan of the plug terminals 11

D
Device description K99 9
Distorsion factor 9

E
External amplifier 16
External speakers 15

F
First power ON 12
Fuses 11
Fuses and plug connectors, positions 11

I
Infrared remote control 13
Input selector 17
Input voltage CD 9
Input voltage tape 9
Internal mute circuit, disabling 17

M
Mains frequency 9

N
Noise level 9

O
Optional eqipment 9
Output impedance 9
Output power 9
Output voltage pre amplifier 9

P
Power voltage, verification 10

S
Standard equipment 9
Supply 9

T
Technical data 9
Transmission range 9
Treble and bass control 14

V
Volume control 12

W
Wiring diagram
- mute 36
- port A 35
- power amp 32
- power supply 31
- power supply Euro 230V 37
- power supply UL/USA 117V 38
- pre amp 33
- sound controler 34

Victory Glass, Inc.

is proud to offer the complete line of over 400 printed and bound jukebox service and parts manuals and related materials. We have purchased the AMR Company and are now the manufacturer of these high quality manuals. They are professionally printed and spiral bound - often times better than the manufacturer's original in quality and content. Many manuals include extra pages and brochures on the jukebox itself. If you need to repair your jukebox or need to learn "how it works" you will be needing our AMR service manuals! A small investment that will pay for itself many times over! (What good is a jukebox if it doesn't work?) **Dealer inquiries invited.**

Order From :

AMR Publishing
A Divison of Victory Glass Inc.
3260 Ute Avenue Waukee, Iowa 50263
Phone (515) 987-5765 FAX (515) 987-5762
www.victoryglass.com

RECORD OF THIS JUKEBOX

MANUFACTURER
MODEL NUMBER
YEAR OF MANUFACTURE
NUMBER OF SELECTIONS PLAYED
INITIAL COST
DATE OF PURCHASE
REPAIRS AND COST
OTHER INFORMATION

NOTES

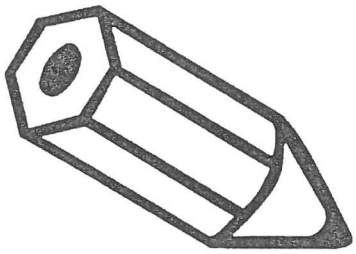

MEMO

SERVICE NOTES

SERVICE NOTES

FOR ADDITIONAL PART NUMBERS

Part No.	Description

Germany
Deutsche Wurlitzer GmbH
Niederdorf 5
D-32351 Stemwede-Levern
Tel.: 0 57 45 - 28-0
Fax: 0 57 45 - 2 82 20
www.wurlitzer.de
contact@deutsche-wurlitzer.de

Great Britain
Deutsche Wurlitzer UK
13 Moorbrook
Southmead Indtustrial Estate
Didcot
Oxfordshire OX11 7HP
Tel.: 01235 / 813 400
Fax: 01235 / 811 109

USA
Wurlitzer Jukebox Company
1341 Estes Street
Gurnee, Illinois 60031
Tel.: 847/662 1700
Fax: 847/662 1212

Australia
Wurlitzer Australia Pty. Ltd.
77 Allingham Street
Bankstown N.S.W. 2200
Tel.: 02 - 97 91 09 22
Fax: 02 - 97 91 06 83

New Zealand
Wurlitzer Pty. Ltd.
Unit 1, 83 Springs Road
East Tamaki, Auckland
P.O. Box 58-616 Greenmount
Tel.: 09 - 2 74 60 10
Fax: 09 - 2 74 48 88

Art.-Nr.: 0068393 - Edition 4303